US009484879B2

(12) **United States Patent**
Scott et al.

(10) **Patent No.: US 9,484,879 B2**
(45) **Date of Patent: Nov. 1, 2016**

(54) **NONLINEAR CAPACITANCE LINEARIZATION**

(71) Applicant: **RF Micro Devices, Inc.**, Greensboro, NC (US)

(72) Inventors: **Baker Scott**, San Jose, CA (US); **George Maxim**, Saratoga, CA (US); **Dirk Robert Walter Leipold**, San Jose, CA (US); **Christian Rye Iversen**, Vestbjerg (DK); **Eric K. Bolton**, Kernersville, NC (US); **Daniel Charles Kerr**, Oak Ridge, NC (US)

(73) Assignee: **Qorvo US, Inc.**, Greensboro, NC (US)

(*) Notice: Subject to any disclaimer, the term of this patent is extended or adjusted under 35 U.S.C. 154(b) by 34 days.

(21) Appl. No.: **14/298,872**

(22) Filed: **Jun. 6, 2014**

(65) **Prior Publication Data**

US 2014/0361839 A1 Dec. 11, 2014

Related U.S. Application Data

(60) Provisional application No. 61/831,666, filed on Jun. 6, 2013, provisional application No. 61/860,932, filed on Aug. 1, 2013, provisional application No. 61/909,028, filed on Nov. 26, 2013, provisional

(Continued)

(51) **Int. Cl.**
H03F 3/193 (2006.01)
H03F 1/56 (2006.01)
(Continued)

(52) **U.S. Cl.**
CPC ***H03H 7/0115*** (2013.01); ***H03F 1/565*** (2013.01); ***H03F 3/193*** (2013.01); ***H03F 3/245*** (2013.01); ***H03F 3/68*** (2013.01); ***H03F 3/72*** (2013.01); ***H03H 7/09*** (2013.01); ***H03H 7/1775*** (2013.01); ***H03H 7/46*** (2013.01); ***H04B 1/1027*** (2013.01); ***H04B 1/18*** (2013.01); *H03F 2200/111* (2013.01); *H03F 2200/267* (2013.01);
(Continued)

(58) **Field of Classification Search**
USPC 330/306, 285, 296, 277, 292
See application file for complete search history.

(56) **References Cited**

U.S. PATENT DOCUMENTS

5,661,414 A 8/1997 Shigehara et al.
5,689,144 A 11/1997 Williams
(Continued)

FOREIGN PATENT DOCUMENTS

EP 1184977 A2 3/2002
WO 0146971 A1 6/2001
WO 2005117255 A1 12/2005

OTHER PUBLICATIONS

Hoppenjans, Eric E. et al., "A Vertically Integrated Tunable UHF Filter," International Microwave Symposium Digest (MTT), May 23-28, 2010, Anaheim, California, IEEE, pp. 1380-1383.
(Continued)

Primary Examiner — Hieu Nguyen
(74) *Attorney, Agent, or Firm* — Withrow & Terranova, P.L.L.C.

(57) **ABSTRACT**

An apparatus, which includes a first electronic device, a first nonlinear capacitance compensation circuit, and a capacitance compensation control circuit, is disclosed. The first electronic device has a first nonlinear capacitance and is coupled to the first nonlinear capacitance compensation circuit, which has a first compensation capacitance and receives a first compensation control signal. The capacitance compensation control circuit adjusts the first compensation capacitance using the first compensation control signal to at least partially linearize the first nonlinear capacitance.

21 Claims, 72 Drawing Sheets

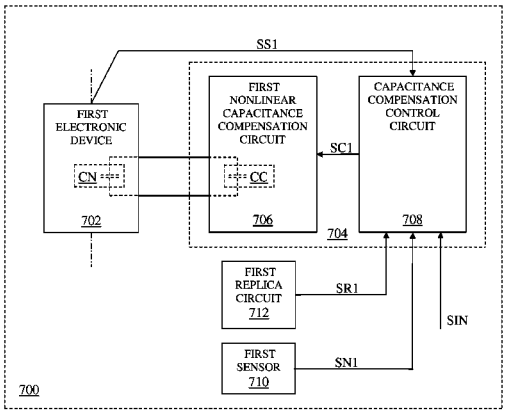

Related U.S. Application Data

application No. 61/949,581, filed on Mar. 7, 2014, provisional application No. 61/951,844, filed on Mar. 12, 2014, provisional application No. 61/982,946, filed on Apr. 23, 2014, provisional application No. 61/982,952, filed on Apr. 23, 2014, provisional application No. 61/982,971, filed on Apr. 23, 2014, provisional application No. 61/938,884, filed on Feb. 12, 2014, provisional application No. 62/008,192, filed on Jun. 5, 2014.

(51) **Int. Cl.**

H03H 7/01	(2006.01)
H03H 7/46	(2006.01)
H04B 1/10	(2006.01)
H03F 3/24	(2006.01)
H03F 3/68	(2006.01)
H03F 3/72	(2006.01)
H04B 1/18	(2006.01)
H03H 7/09	(2006.01)

(52) **U.S. Cl.**

CPC . *H03F2200/451* (2013.01); *H03F 2203/7209* (2013.01); *H03H 2210/012* (2013.01); *H03H 2210/025* (2013.01); *H03H 2210/04* (2013.01)

(56) **References Cited**

U.S. PATENT DOCUMENTS

5,841,330	A	11/1998	Wenzel et al.	
5,880,620	A	3/1999	Gitlin et al.	
5,896,073	A	4/1999	Miyazaki et al.	
6,529,750	B1	3/2003	Zhang et al.	
8,787,850	B2 *	7/2014	Bockelman	H03F 1/086 330/292
2002/0057139	A1	5/2002	Matsumura et al.	
2003/0008577	A1	1/2003	Quigley et al.	
2005/0195063	A1	9/2005	Mattson	
2006/0220727	A1	10/2006	Yen	
2011/0163824	A1	7/2011	Kawano	
2012/0081192	A1	4/2012	Hanaoka	

OTHER PUBLICATIONS

Joshi, H. et al., "Tunable high Q narrow-band triplexer," IEEE MTT-S International Microwave Symposium Digest, Jun. 7-12, 2009, Boston, MA, IEEE, pp. 1477-1480.

Kamali-Sarvestani, Reza et al., "Fabrication of High Quality Factor RF-Resonator Using Embedded Inductor and Via Capacitor," IECON 2010—36th Annual Conference on IEEE Industrial Electronics Society, Nov. 7-10, 2010, Glendale, Arizona, IEEE, pp. 2283-2287.

International Search Report and Written Opinion for PCT/US2014/030431, mailed Jun. 20, 2014, 14 pages.

Non-Final Office Action for U.S. Appl. No. 14/449,594, mailed Oct. 10, 2014, 8 pages.

Invitation to Pay Additional Fees and, Where Applicable, Protest Fee for PCT/US2014/048608, mailed Oct. 21, 2014, 7 pages.

International Search Report and Written Opinion for PCT/US2014/048608, mailed Dec. 16, 2014, 18 pages.

* cited by examiner

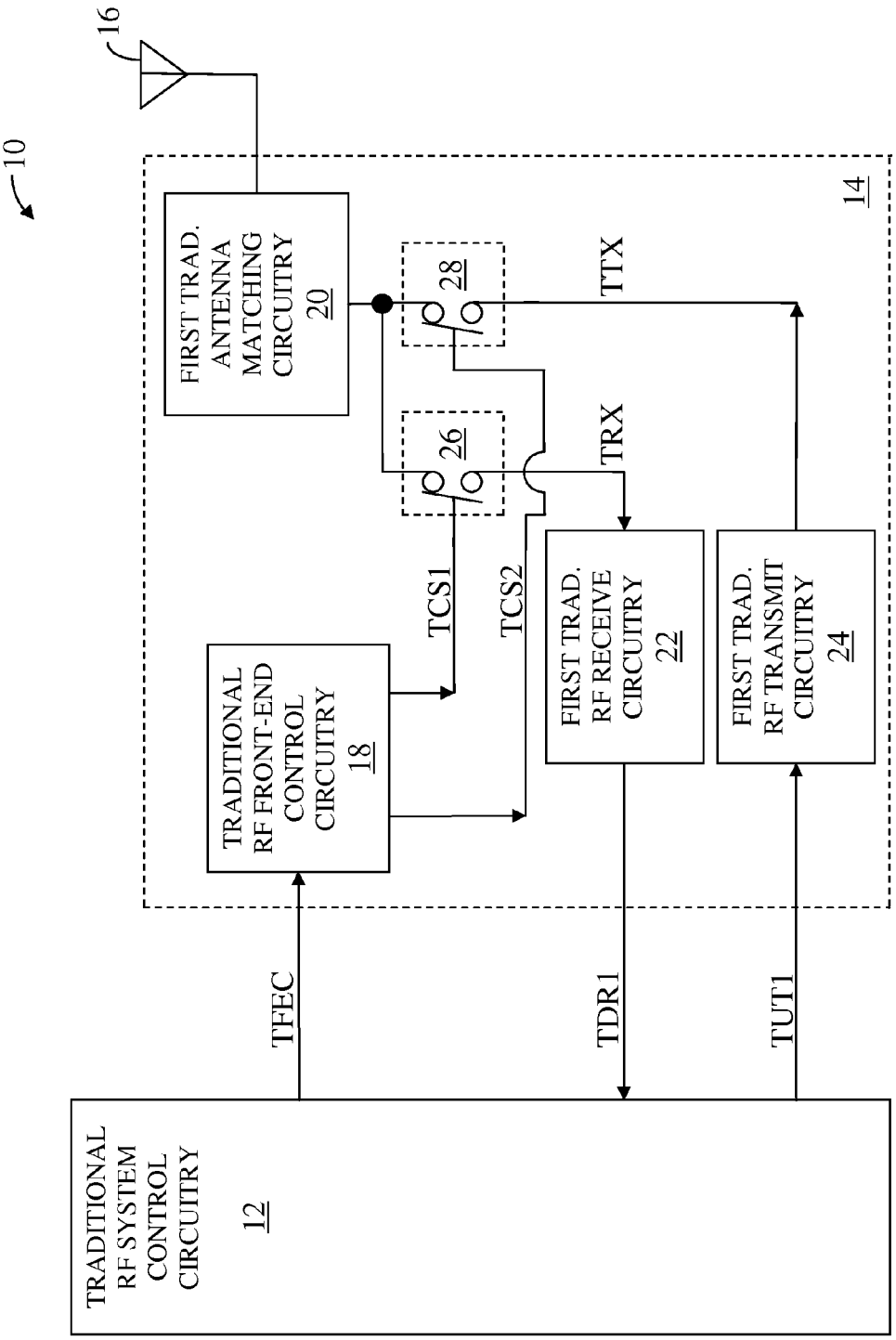

FIG. 1 – Prior Art

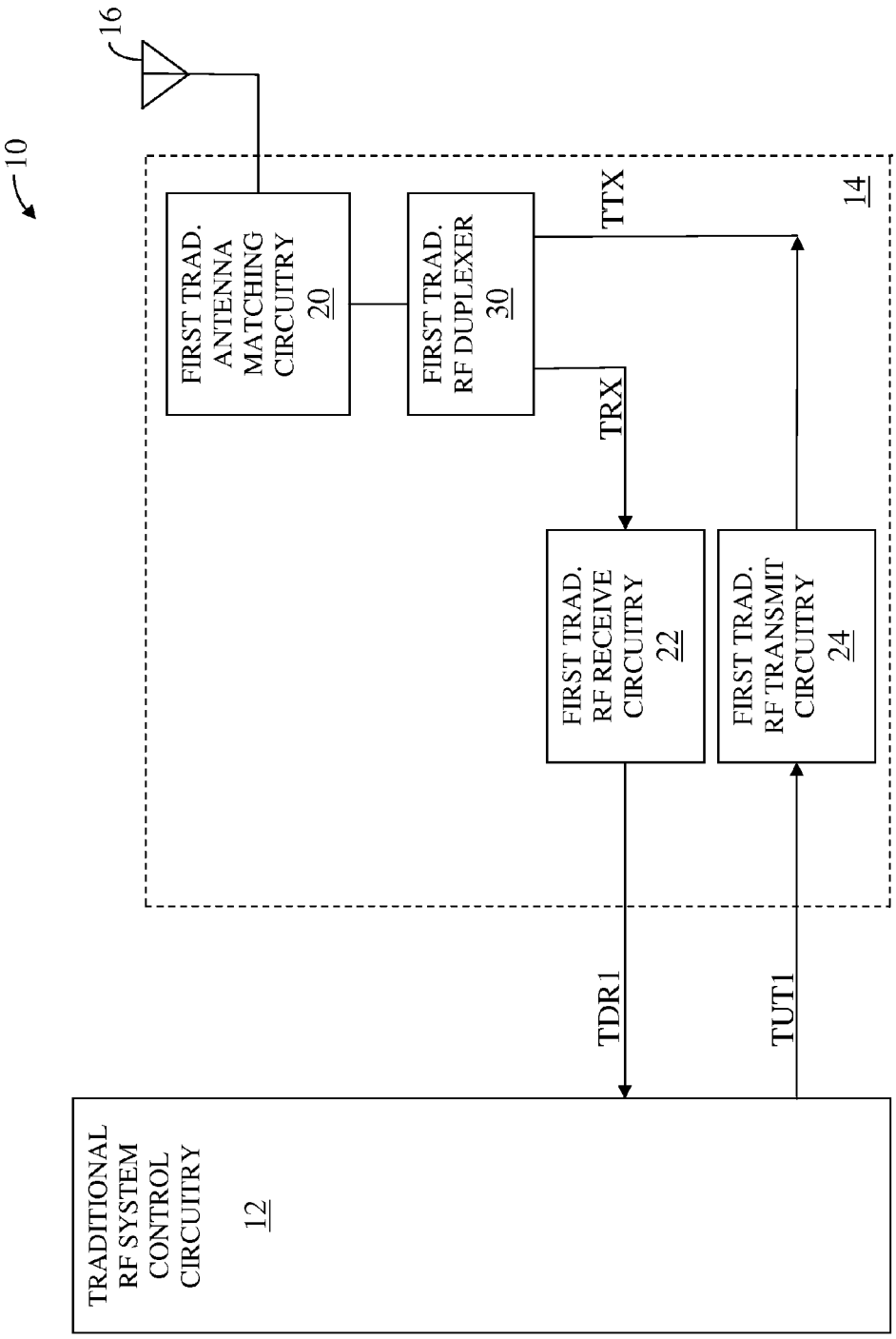

FIG. 2 – Prior Art

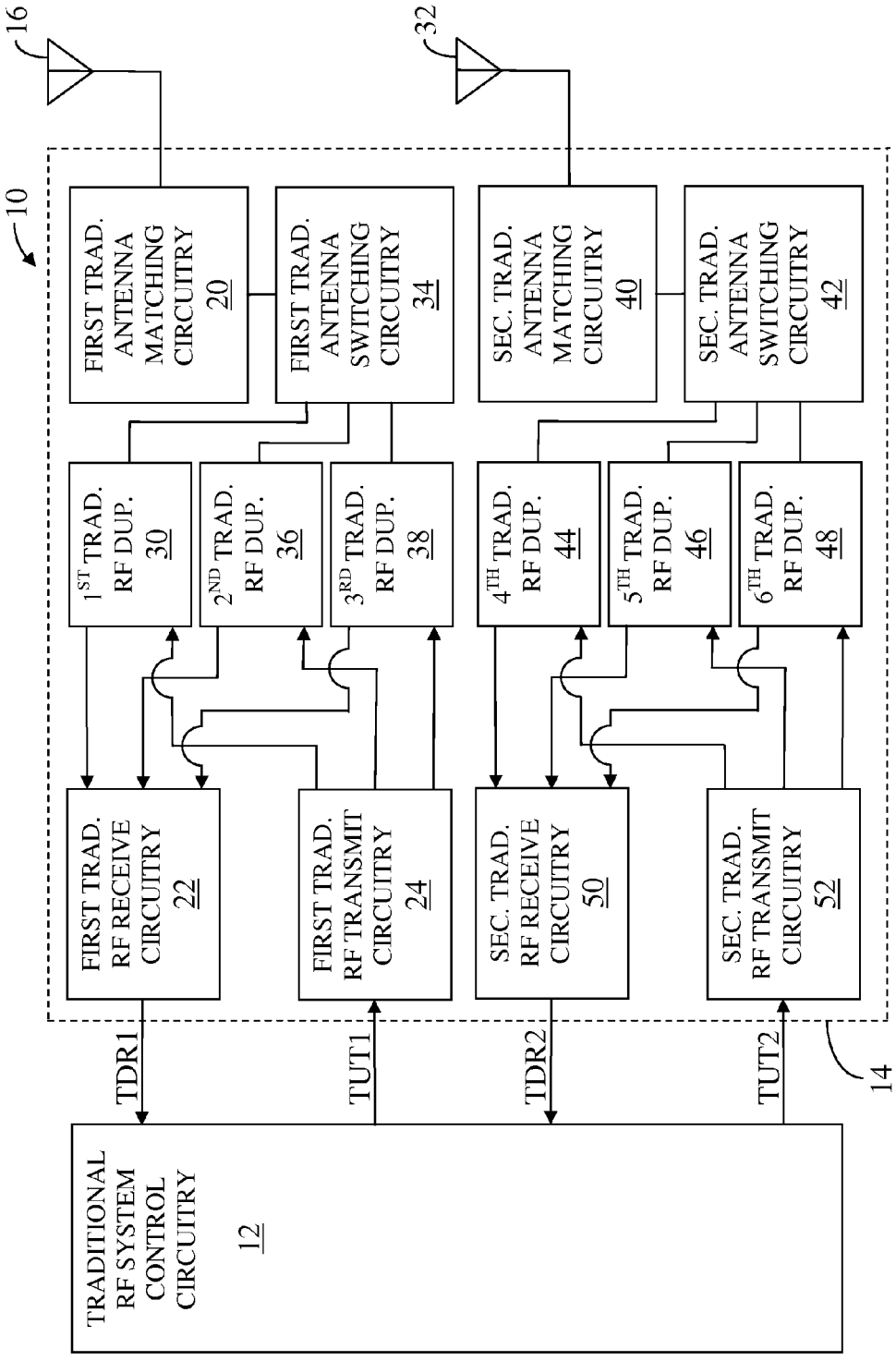

FIG. 3 – Prior Art

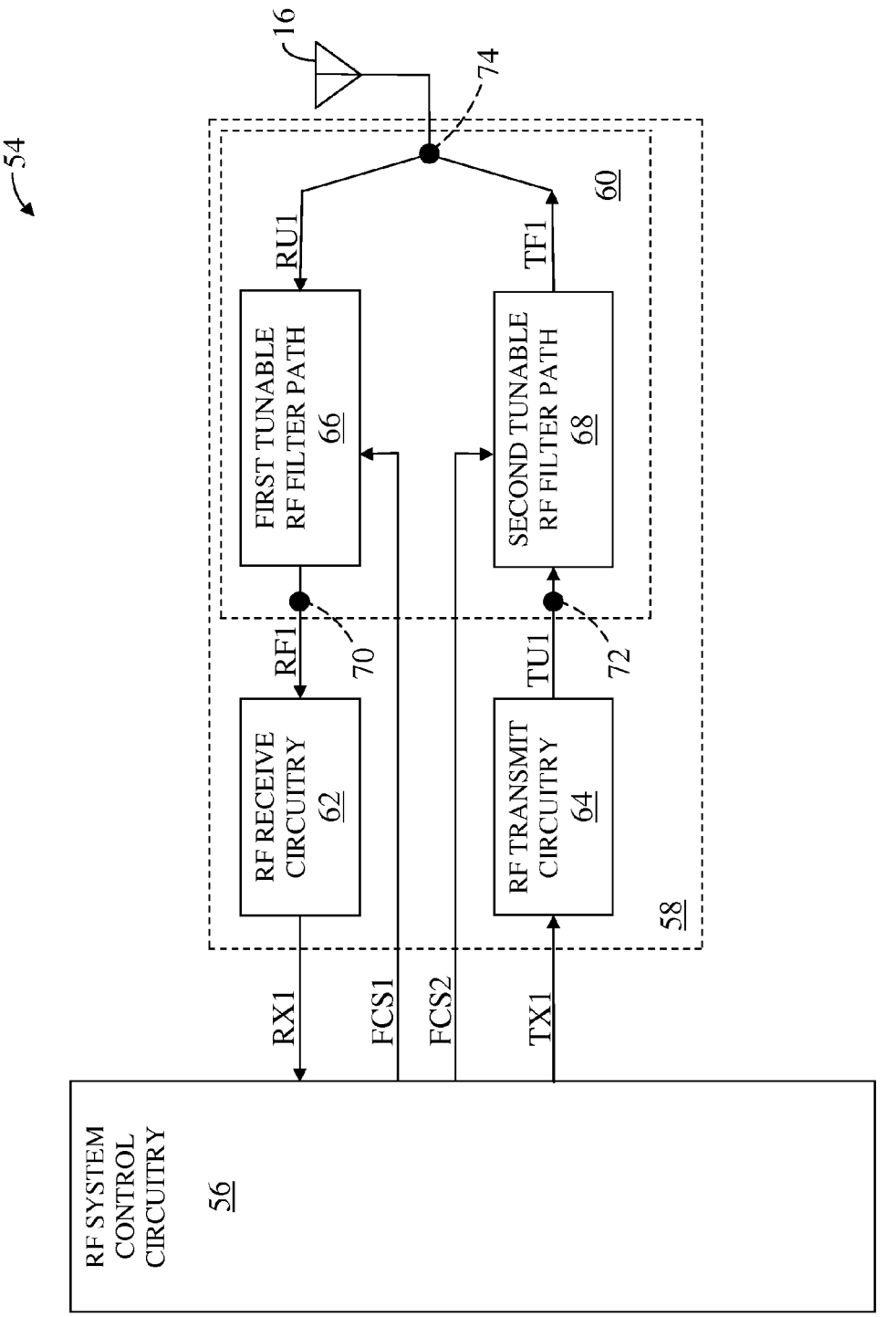
54
16
74
60
RU1
TF1
FIRST TUNABLE RF FILTER PATH 66
SECOND TUNABLE RF FILTER PATH 68
RF1
TU1
70
72
RF RECEIVE CIRCUITRY 62
RF TRANSMIT CIRCUITRY 64
58
RX1
FCS1
FCS2
TX1
RF SYSTEM CONTROL CIRCUITRY 56

FIG. 4

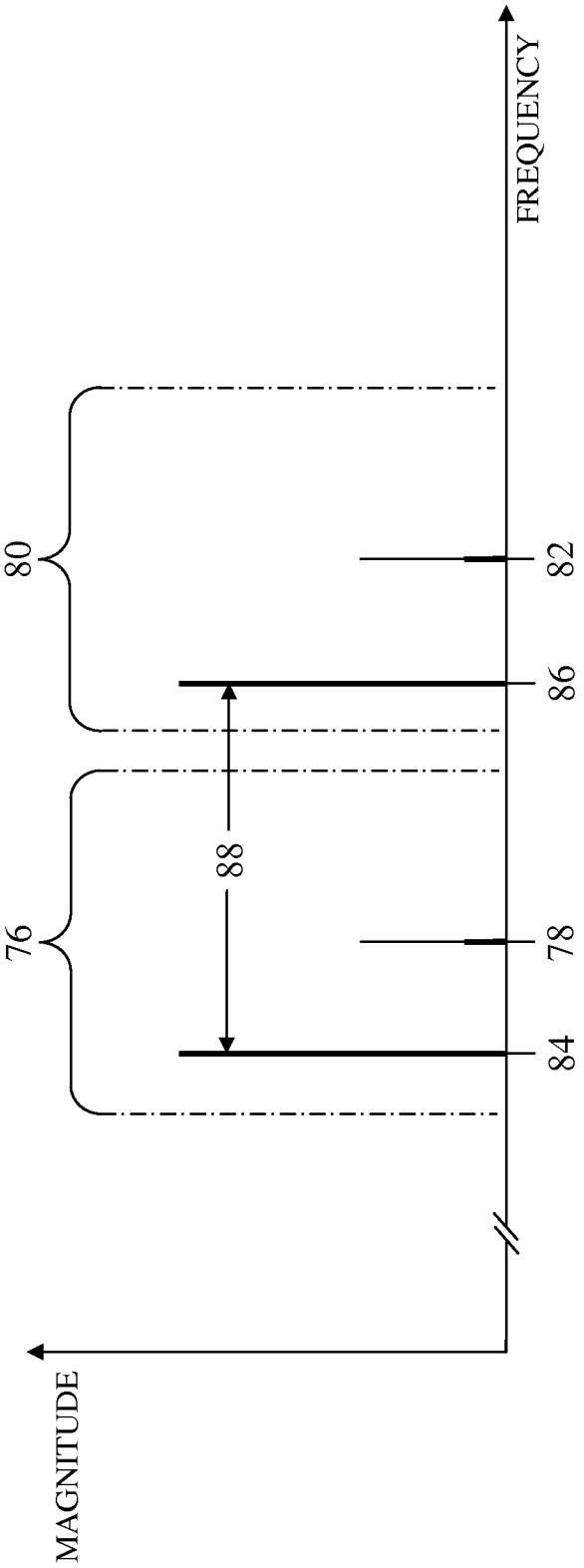

FIG. 5

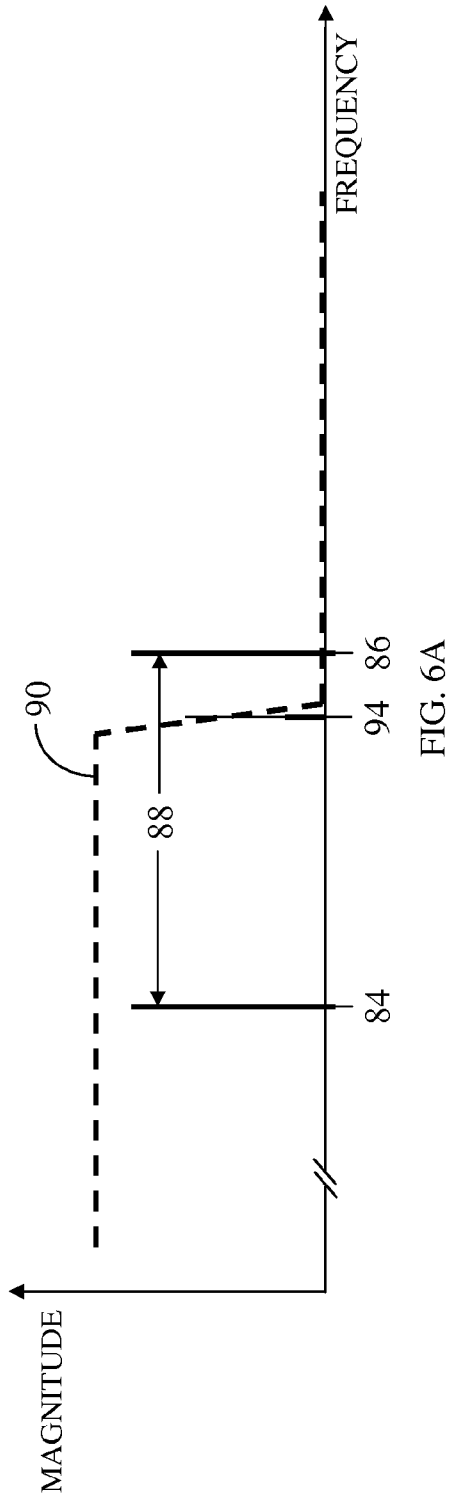
FREQUENCY
MAGNITUDE
90
88
84
86
94

FIG. 6A

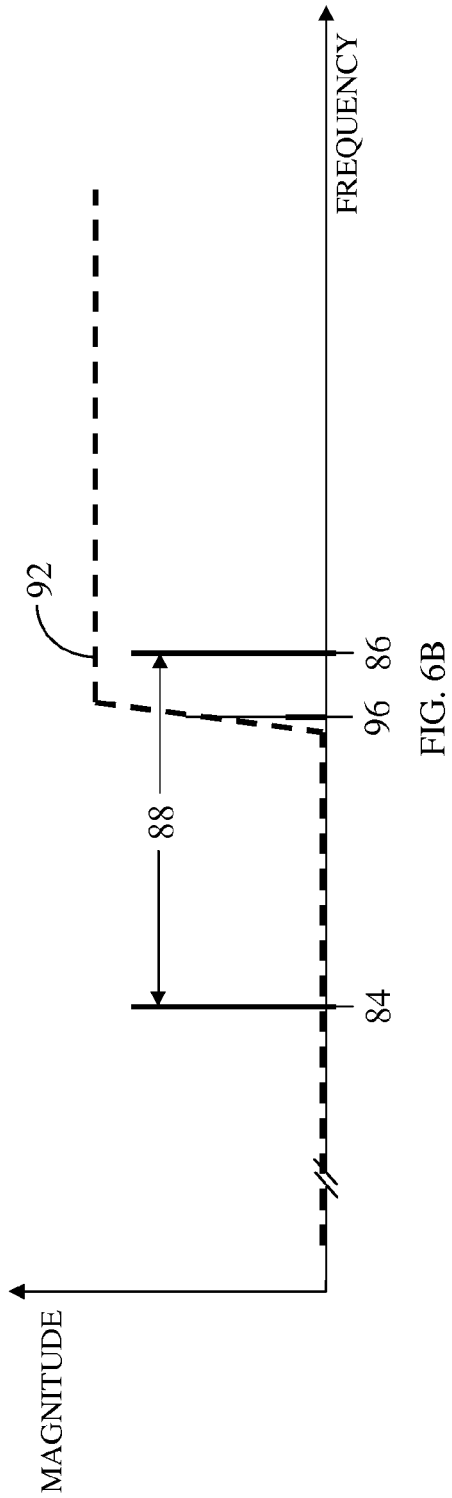
FREQUENCY
MAGNITUDE
92
88
84
86
96

FIG. 6B

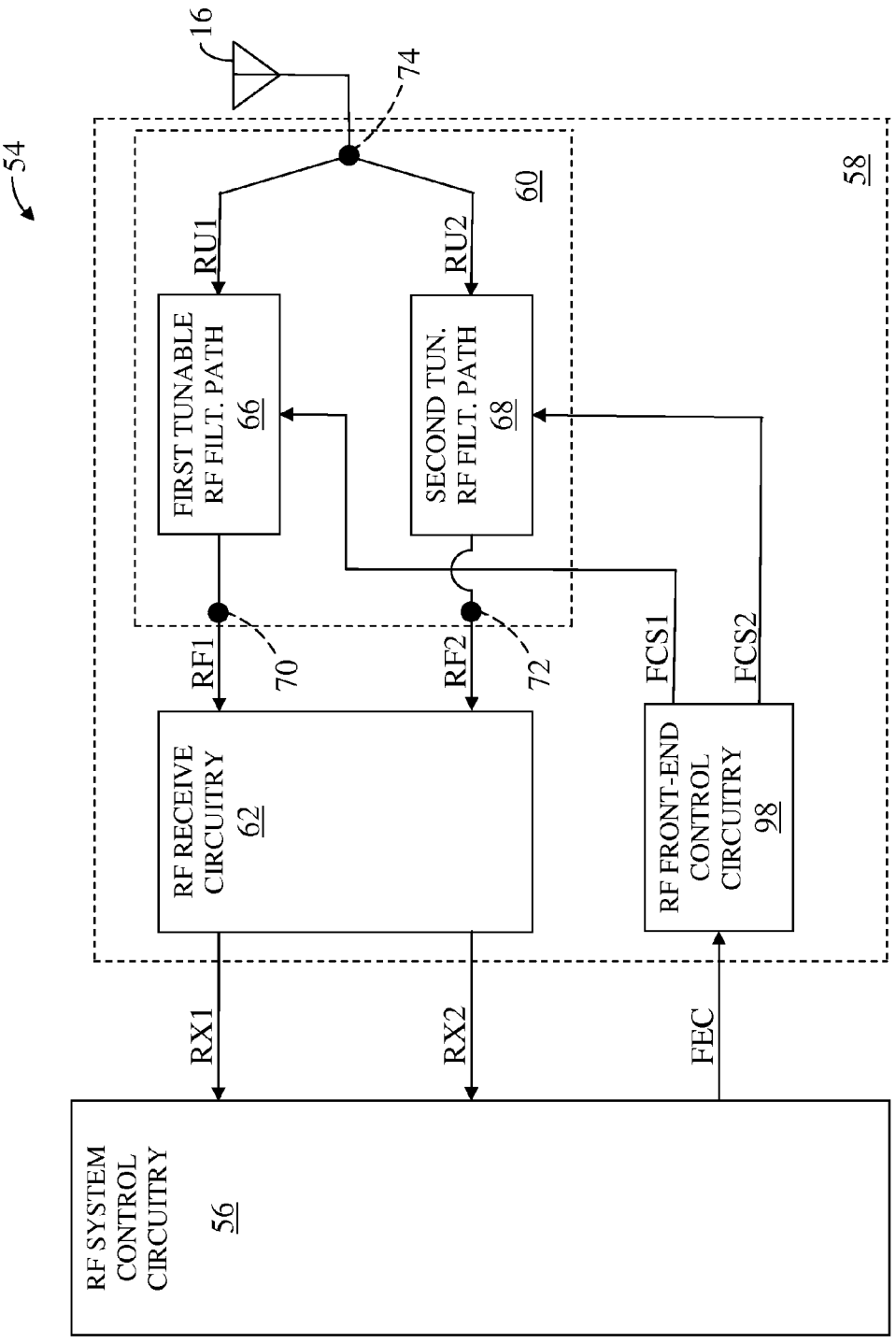
54
16
74
58
60
RU1
RU2
FIRST TUNABLE RF FILT. PATH 66
SECOND TUN. RF FILT. PATH 68
RF1
RF2
70
72
FCS1
FCS2
RF RECEIVE CIRCUITRY 62
RF FRONT-END CONTROL CIRCUITRY 98
RX1
RX2
FEC
RF SYSTEM CONTROL CIRCUITRY 56

FIG. 7

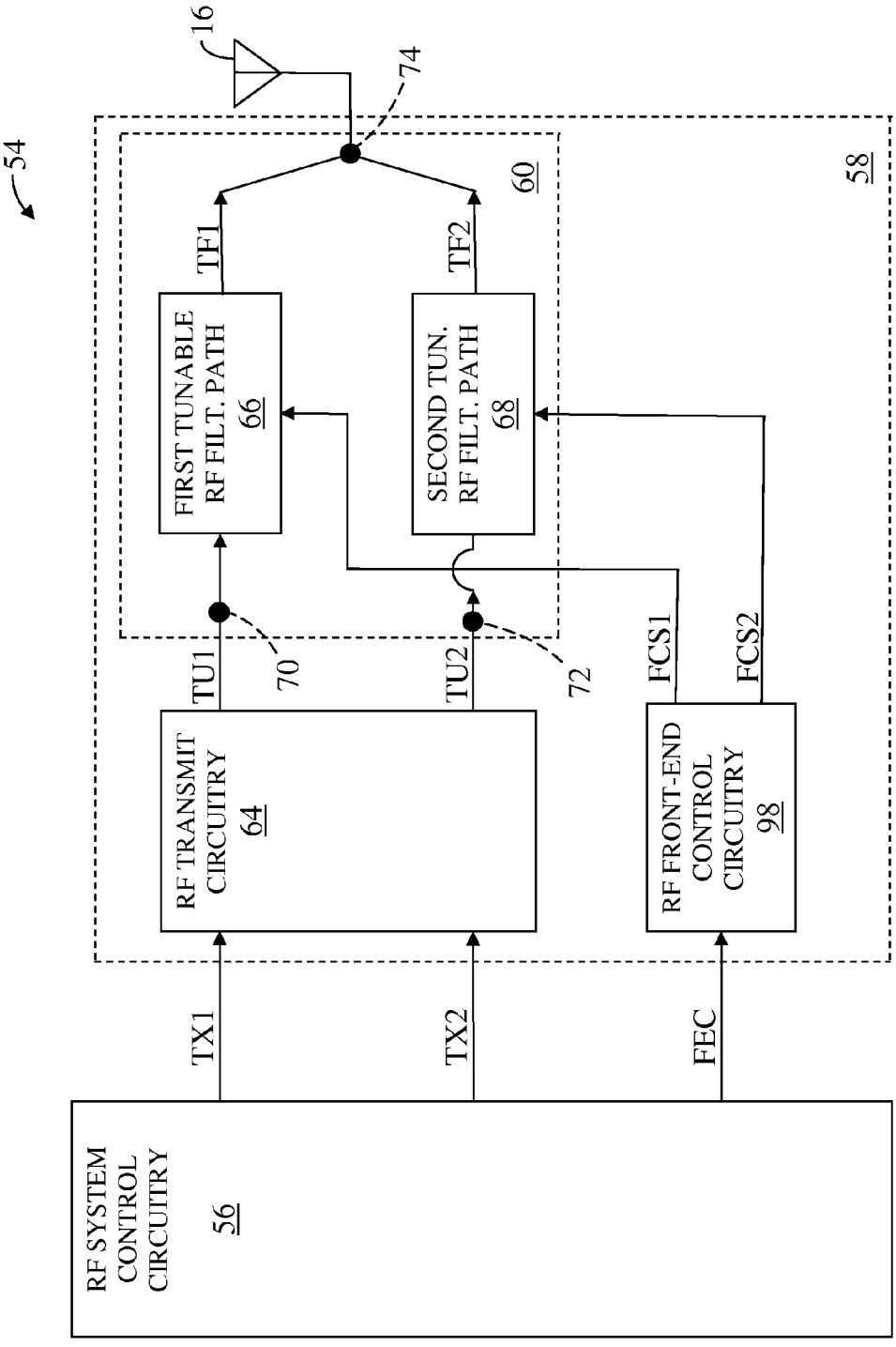
54
16
74
58
60
TF1
TF2
FIRST TUNABLE RF FILT. PATH 66
SECOND TUN. RF FILT. PATH 68
TU1
TU2
70
72
FCS1
FCS2
RF TRANSMIT CIRCUITRY 64
RF FRONT-END CONTROL CIRCUITRY 98
TX1
TX2
FEC
RF SYSTEM CONTROL CIRCUITRY 56

FIG. 8

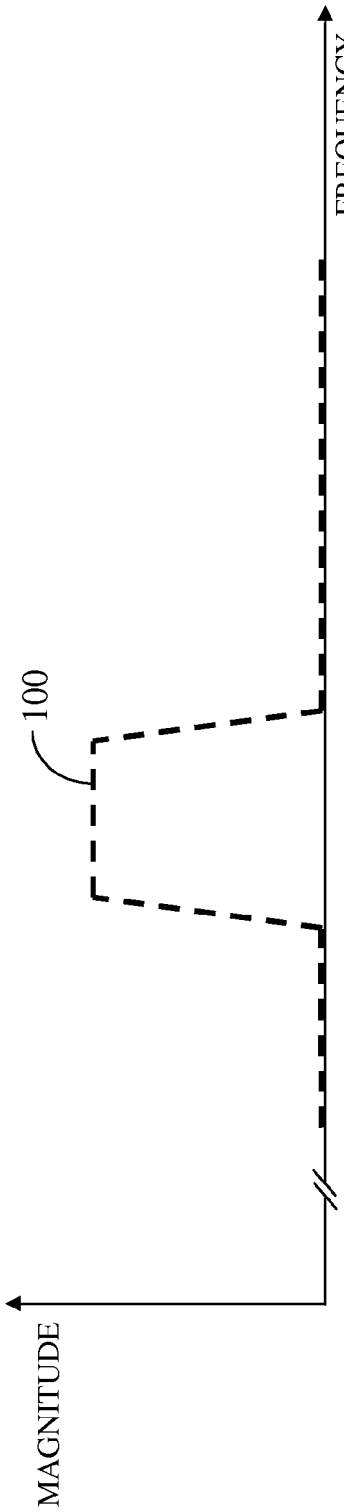

FIG. 9A

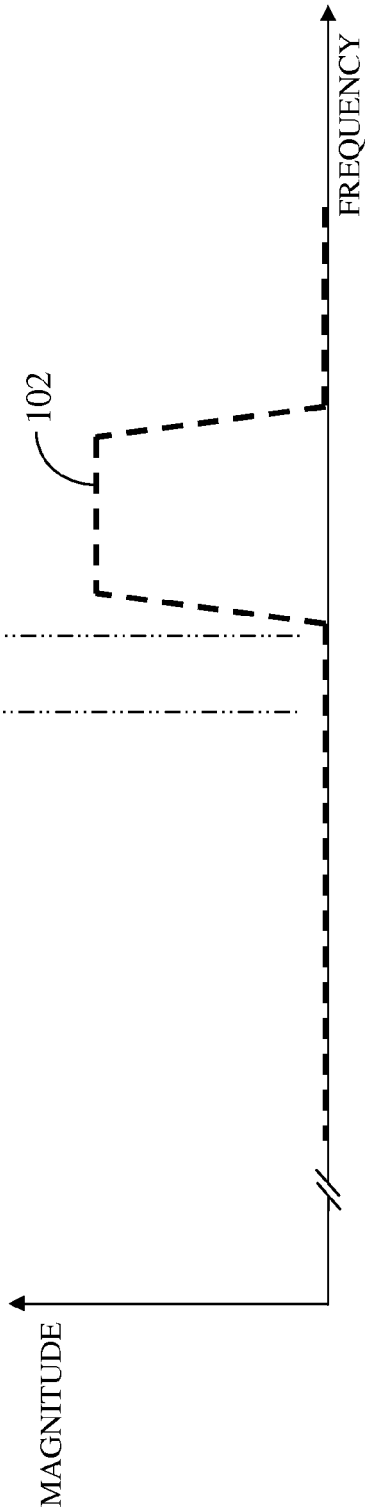

FIG. 9B

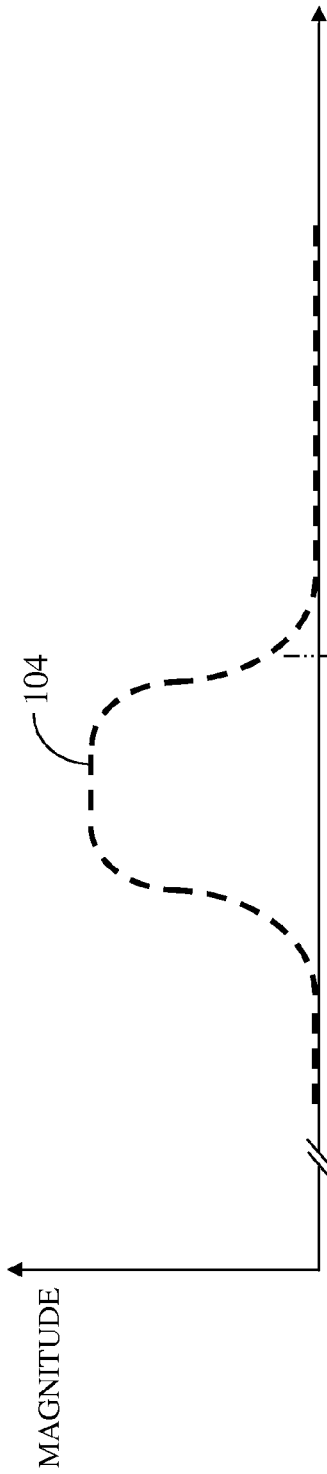

FIG. 10A – Prior Art

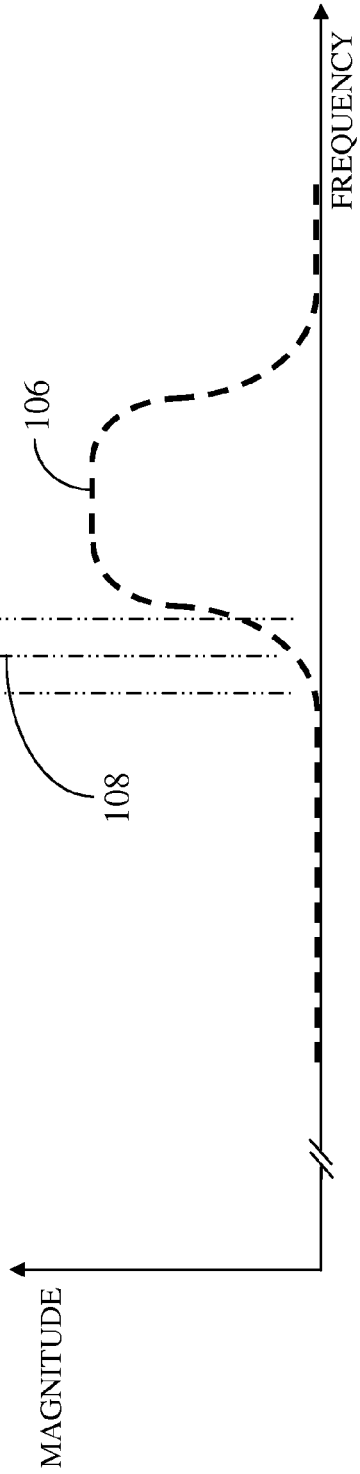

FIG. 10B – Prior Art

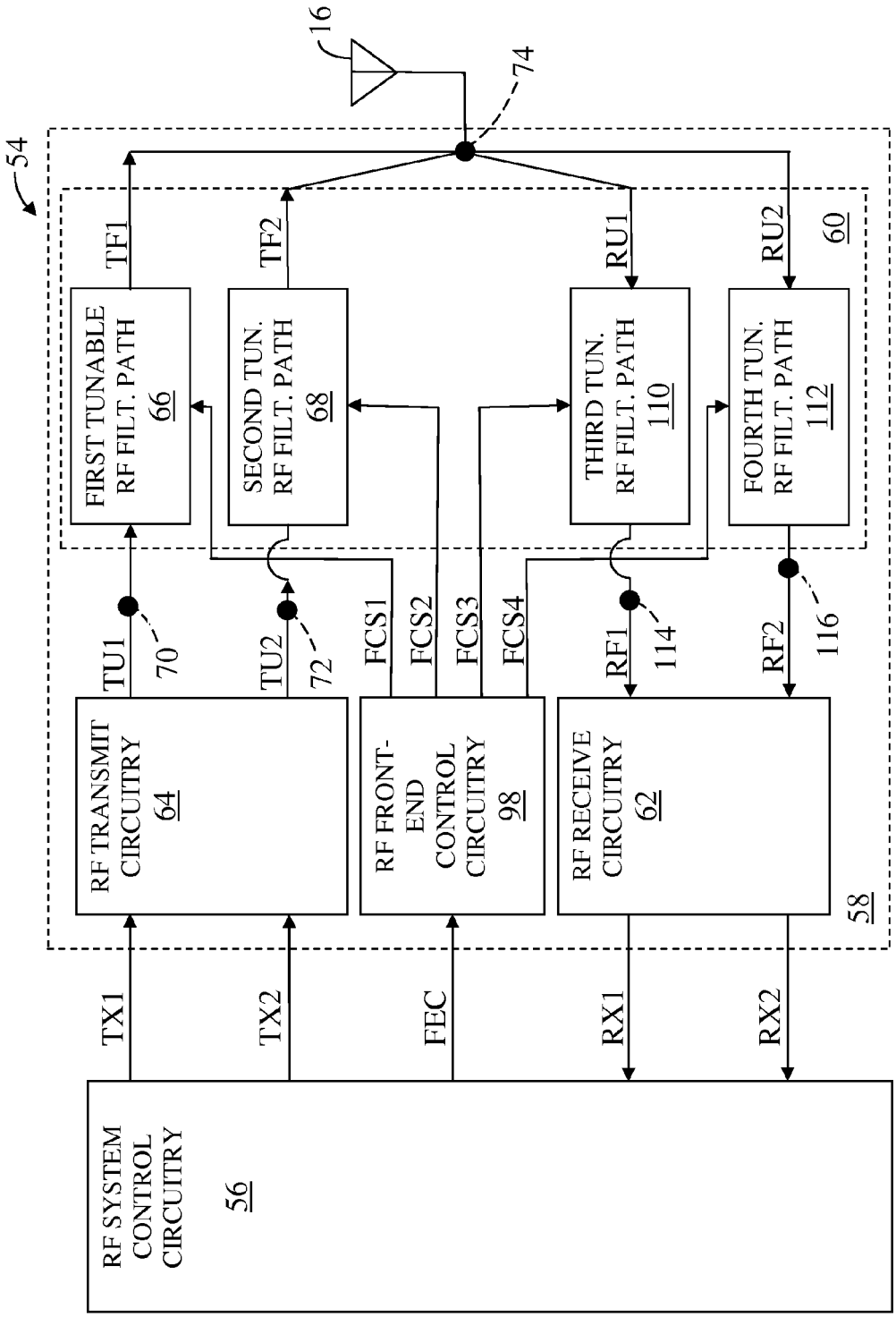
16
74
54
TF1
TF2
RU1
RU2
60
FIRST TUNABLE RF FILT. PATH 66
SECOND TUN. RF FILT. PATH 68
THIRD TUN. RF FILT. PATH 110
FOURTH TUN. RF FILT. PATH 112
TU1
70
TU2
72
FCS1
FCS2
FCS3
FCS4
RF1
114
RF2
116
RF TRANSMIT CIRCUITRY 64
RF FRONT-END CONTROL CIRCUITRY 98
RF RECEIVE CIRCUITRY 62
58
TX1
TX2
FEC
RX1
RX2
RF SYSTEM CONTROL CIRCUITRY 56

FIG. 11

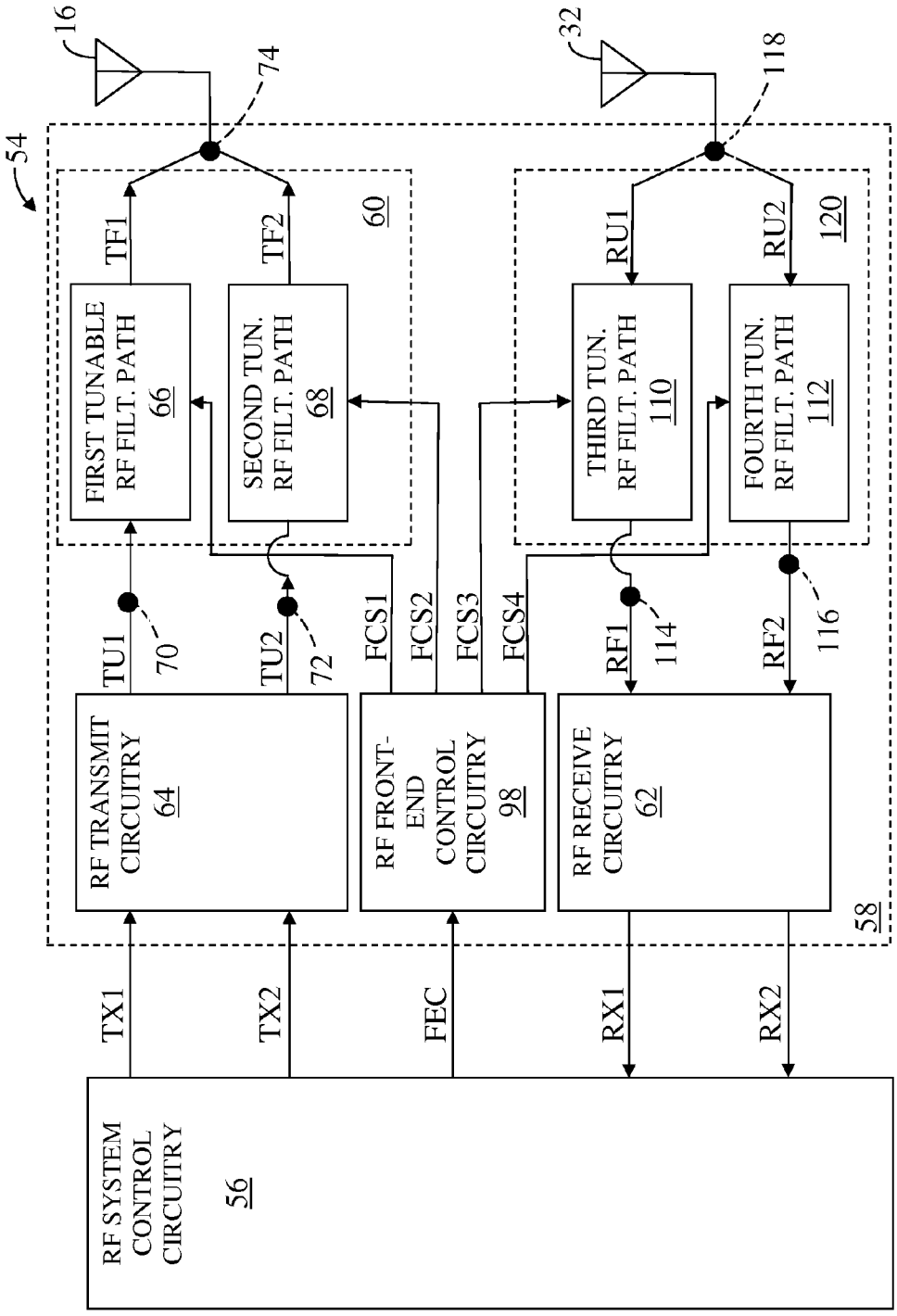
16
74
32
118
54
TF1
TF2
60
RU1
RU2
120
FIRST TUNABLE RF FILT. PATH 66
SECOND TUN. RF FILT. PATH 68
THIRD TUN. RF FILT. PATH 110
FOURTH TUN. RF FILT. PATH 112
TU1
70
TU2
72
FCS1
FCS2
FCS3
FCS4
RF1
114
RF2
116
RF TRANSMIT CIRCUITRY 64
RF FRONT-END CONTROL CIRCUITRY 98
RF RECEIVE CIRCUITRY 62
58
TX1
TX2
FEC
RX1
RX2
RF SYSTEM CONTROL CIRCUITRY 56

FIG. 12

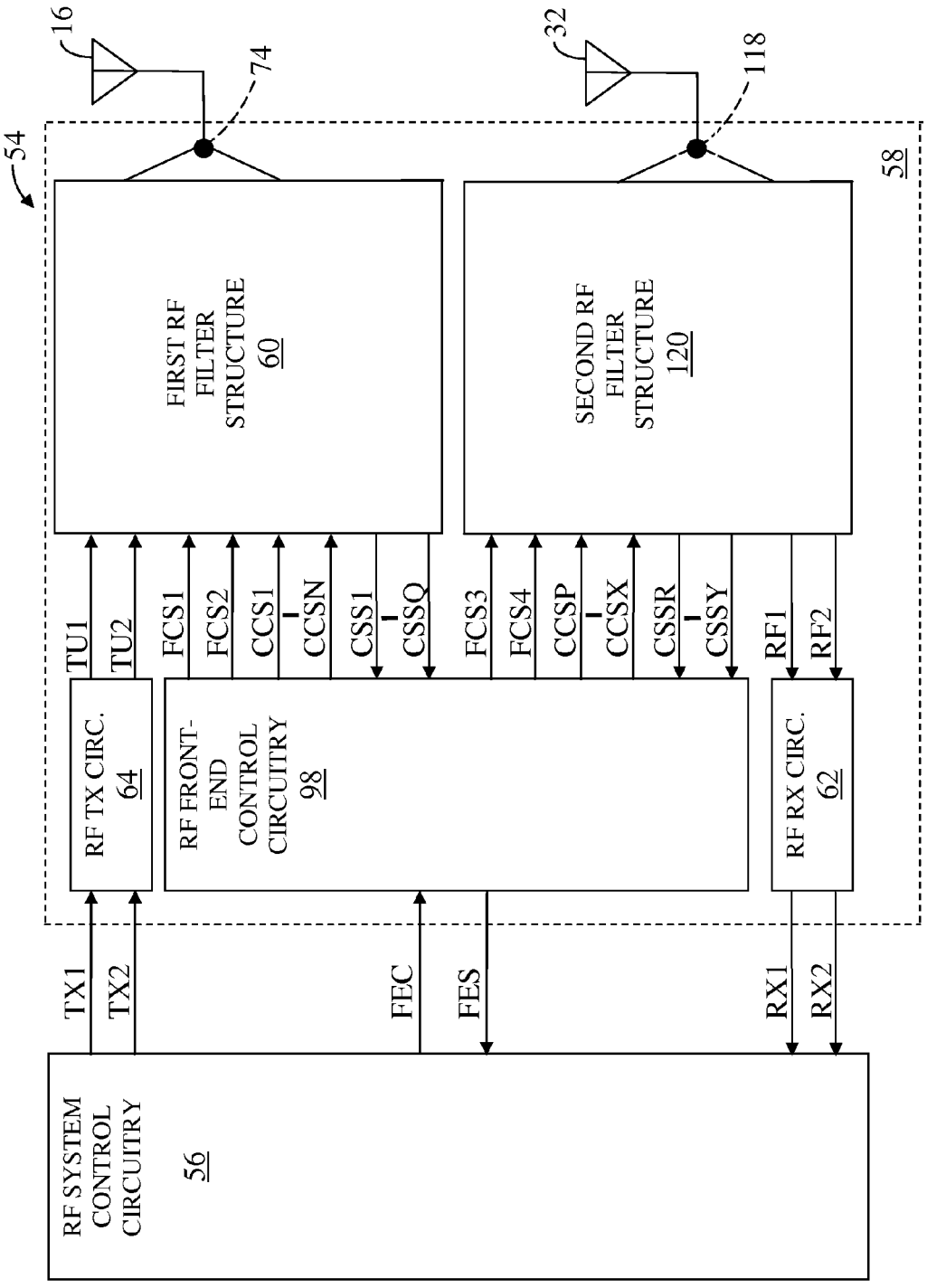
16
74
32
118
54
58
FIRST RF FILTER STRUCTURE 60
SECOND RF FILTER STRUCTURE 120
TU1
TU2
FCS1
FCS2
CCS1
CCSN
CSS1
CSSQ
FCS3
FCS4
CCSP
CCSX
CSSR
CSSY
RF1
RF2
RF TX CIRC. 64
RF FRONT-END CONTROL CIRCUITRY 98
RF RX CIRC. 62
TX1
TX2
FEC
FES
RX1
RX2
RF SYSTEM CONTROL CIRCUITRY 56

FIG. 13

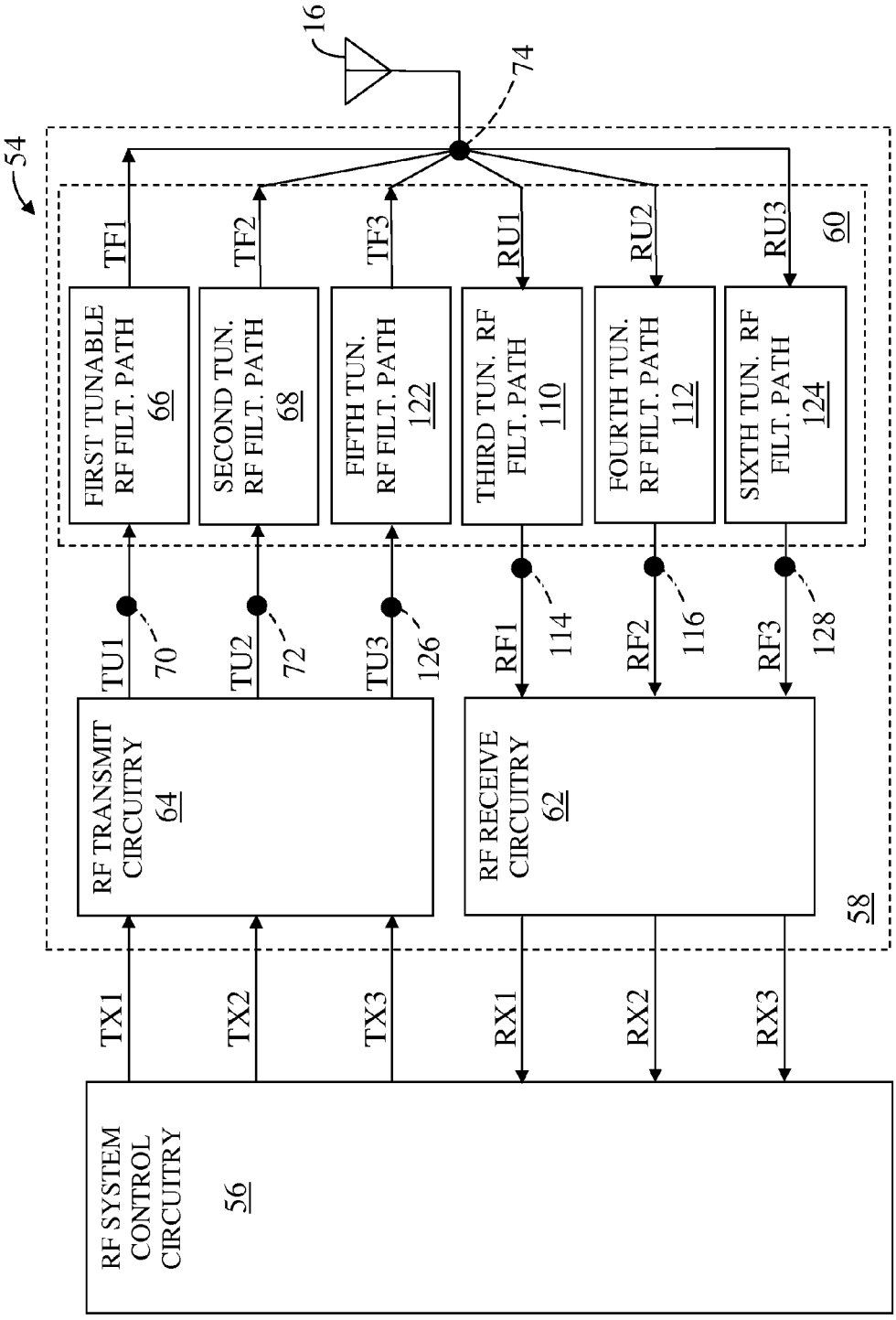
16
74
54
TF1
TF2
TF3
RU1
RU2
RU3
60
FIRST TUNABLE RF FILT. PATH 66
SECOND TUN. RF FILT. PATH 68
FIFTH TUN. RF FILT. PATH 122
THIRD TUN. RF FILT. PATH 110
FOURTH TUN. RF FILT. PATH 112
SIXTH TUN. RF FILT. PATH 124
TU1
TU2
TU3
70
72
126
RF1
RF2
RF3
114
116
128
RF TRANSMIT CIRCUITRY 64
RF RECEIVE CIRCUITRY 62
58
TX1
TX2
TX3
RX1
RX2
RX3
RF SYSTEM CONTROL CIRCUITRY 56

FIG. 14

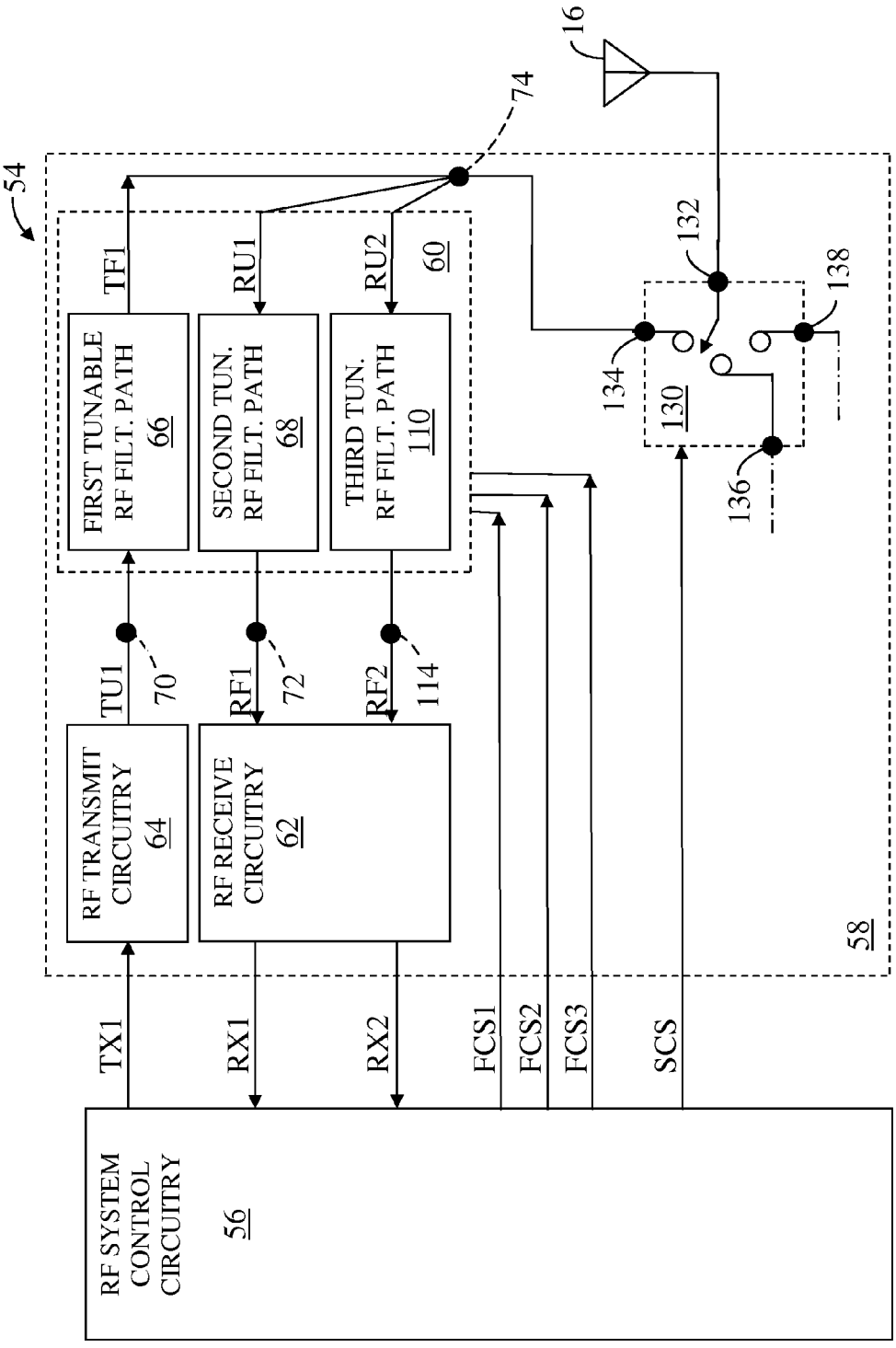
RF SYSTEM CONTROL CIRCUITRY 56
TX1
RX1
RX2
FCS1
FCS2
FCS3
SCS
54
58
RF TRANSMIT CIRCUITRY 64
RF RECEIVE CIRCUITRY 62
TU1
70
RF1
72
RF2
114
60
FIRST TUNABLE RF FILT. PATH 66
SECOND TUN. RF FILT. PATH 68
THIRD TUN. RF FILT. PATH 110
TF1
RU1
RU2
74
16
132
130
134
136
138

FIG. 15

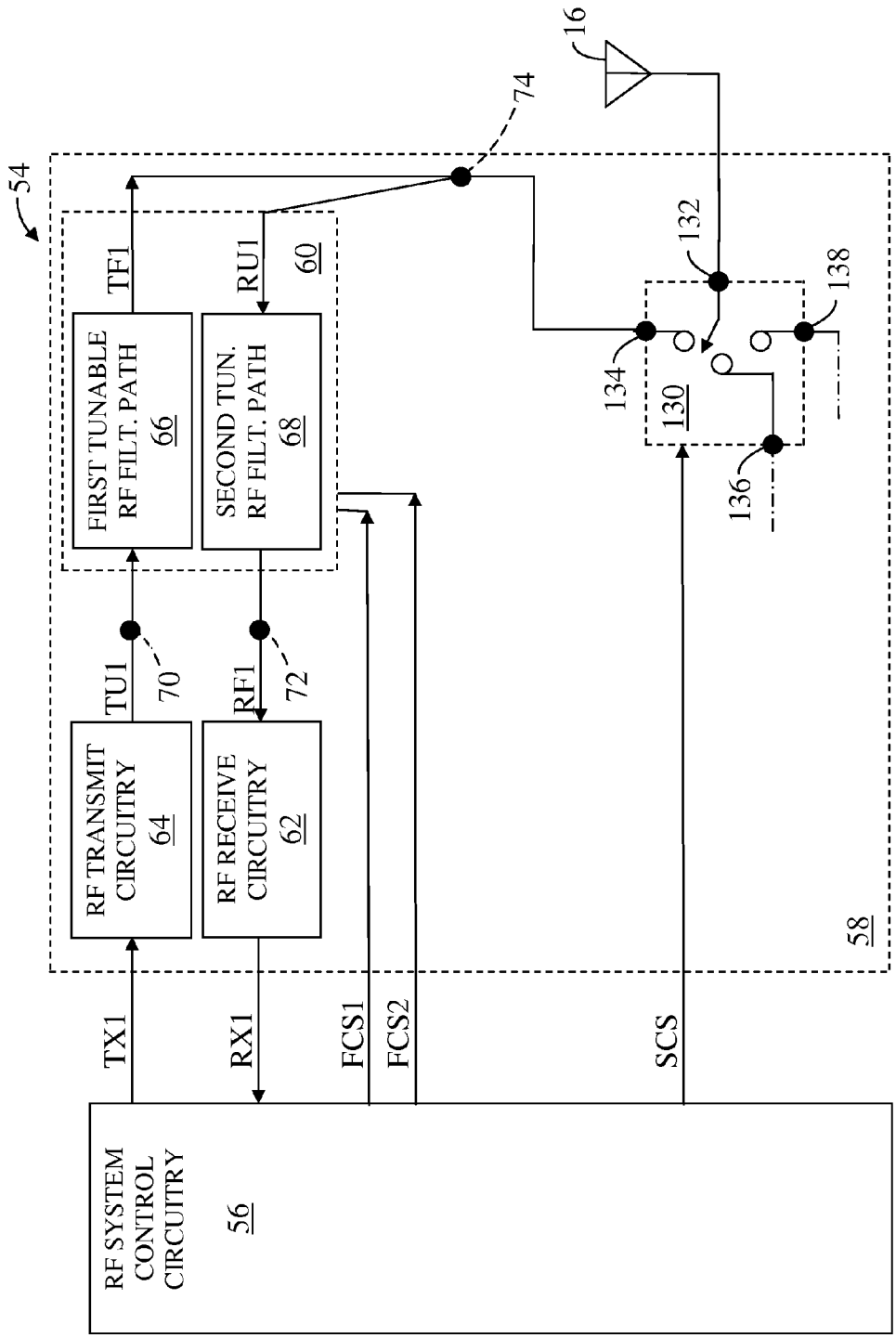
RF SYSTEM CONTROL CIRCUITRY
56
TX1
RX1
FCS1
FCS2
SCS
RF TRANSMIT CIRCUITRY
64
RF RECEIVE CIRCUITRY
62
TU1
70
RF1
72
FIRST TUNABLE RF FILT. PATH
66
SECOND TUN. RF FILT. PATH
68
TF1
RU1
60
54
58
74
16
132
138
134
130
136

FIG. 16

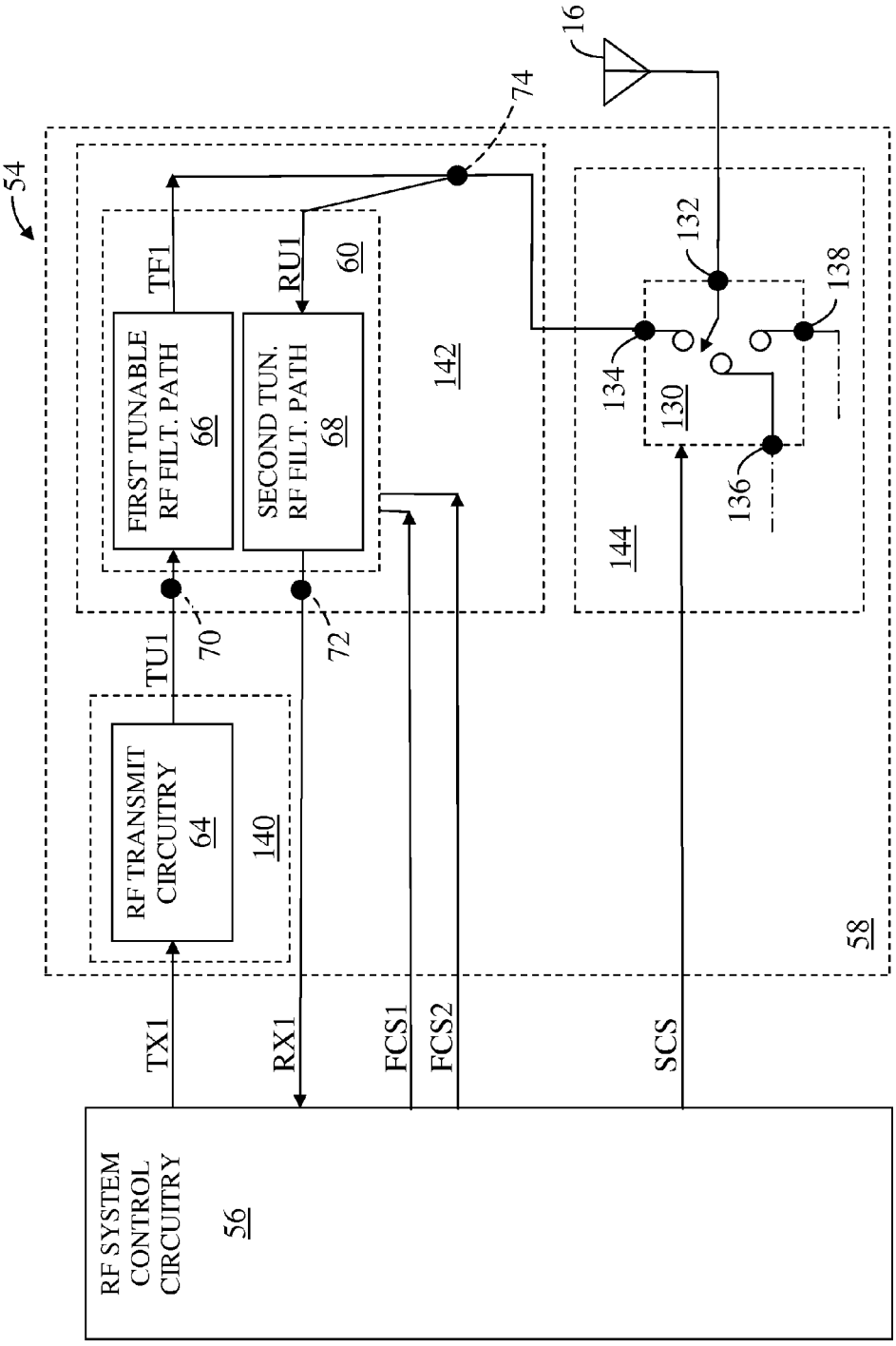
16
74
54
TF1
RU1
60
FIRST TUNABLE RF FILT. PATH 66
SECOND TUN. RF FILT. PATH 68
142
132
138
134
130
136
144
TU1
70
72
RF TRANSMIT CIRCUITRY 64
140
58
TX1
RX1
FCS1
FCS2
SCS
RF SYSTEM CONTROL CIRCUITRY 56

FIG. 17

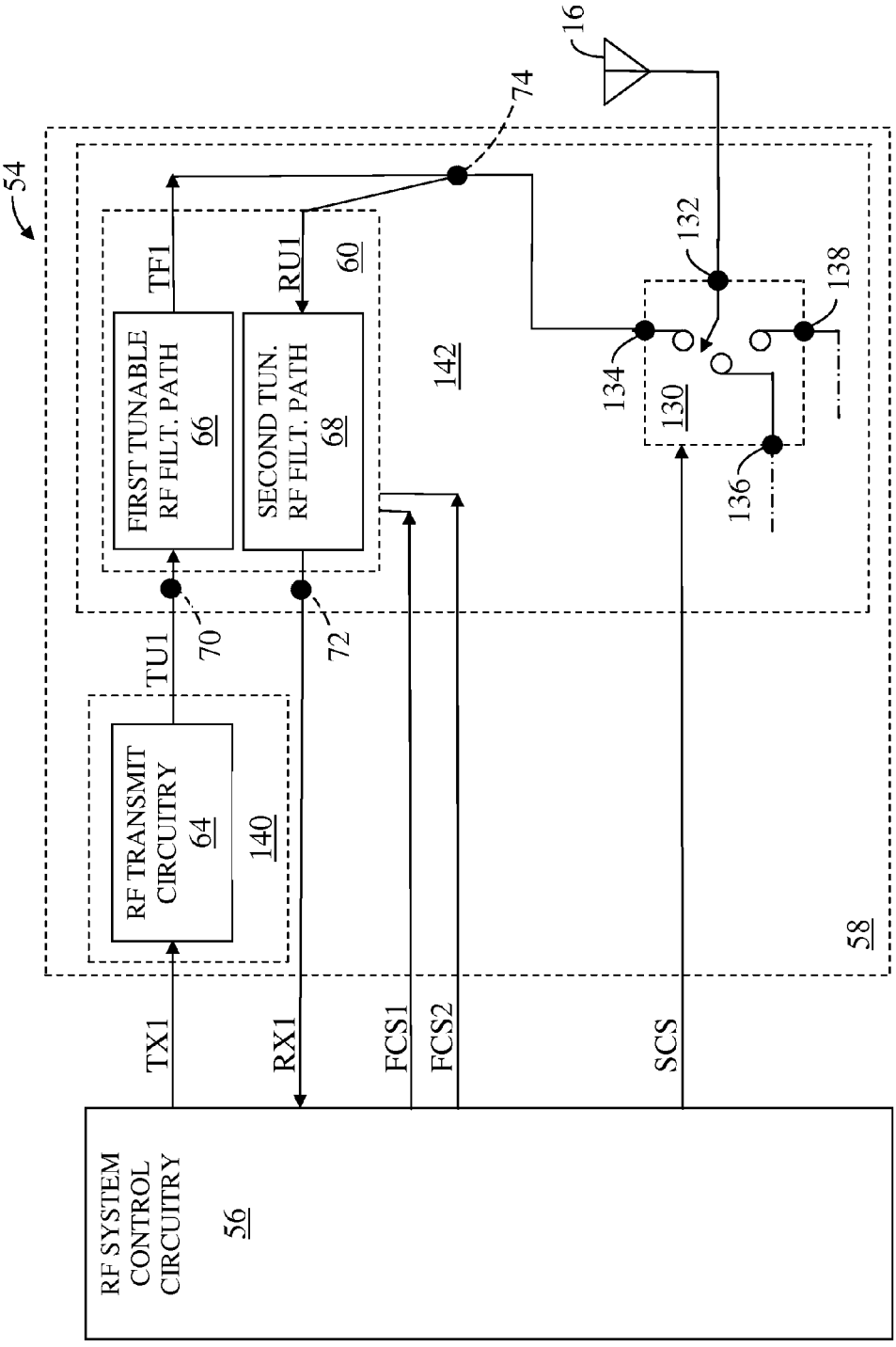
RF SYSTEM CONTROL CIRCUITRY
56
TX1
RX1
FCS1
FCS2
SCS
RF TRANSMIT CIRCUITRY
64
140
TU1
70
72
FIRST TUNABLE RF FILT. PATH
66
SECOND TUN. RF FILT. PATH
68
TF1
RU1
60
142
54
58
74
16
132
134
130
136
138

FIG. 18

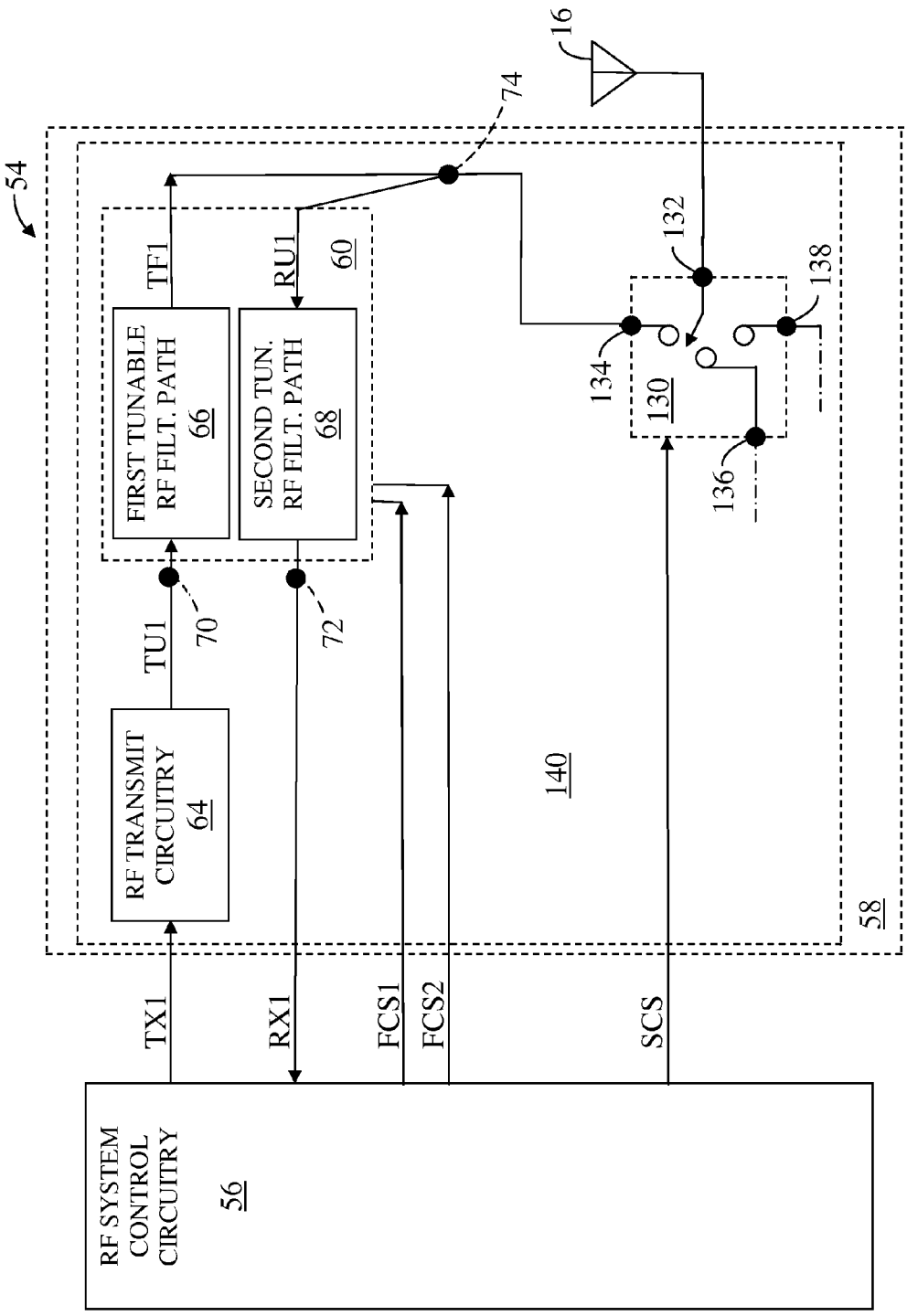
54
16
74
TF1
RU1
60
FIRST TUNABLE RF FILT. PATH 66
SECOND TUN. RF FILT. PATH 68
132
138
134
130
136
TU1
70
72
RF TRANSMIT CIRCUITRY 64
140
58
TX1
RX1
FCS1
FCS2
SCS
RF SYSTEM CONTROL CIRCUITRY 56

FIG. 19

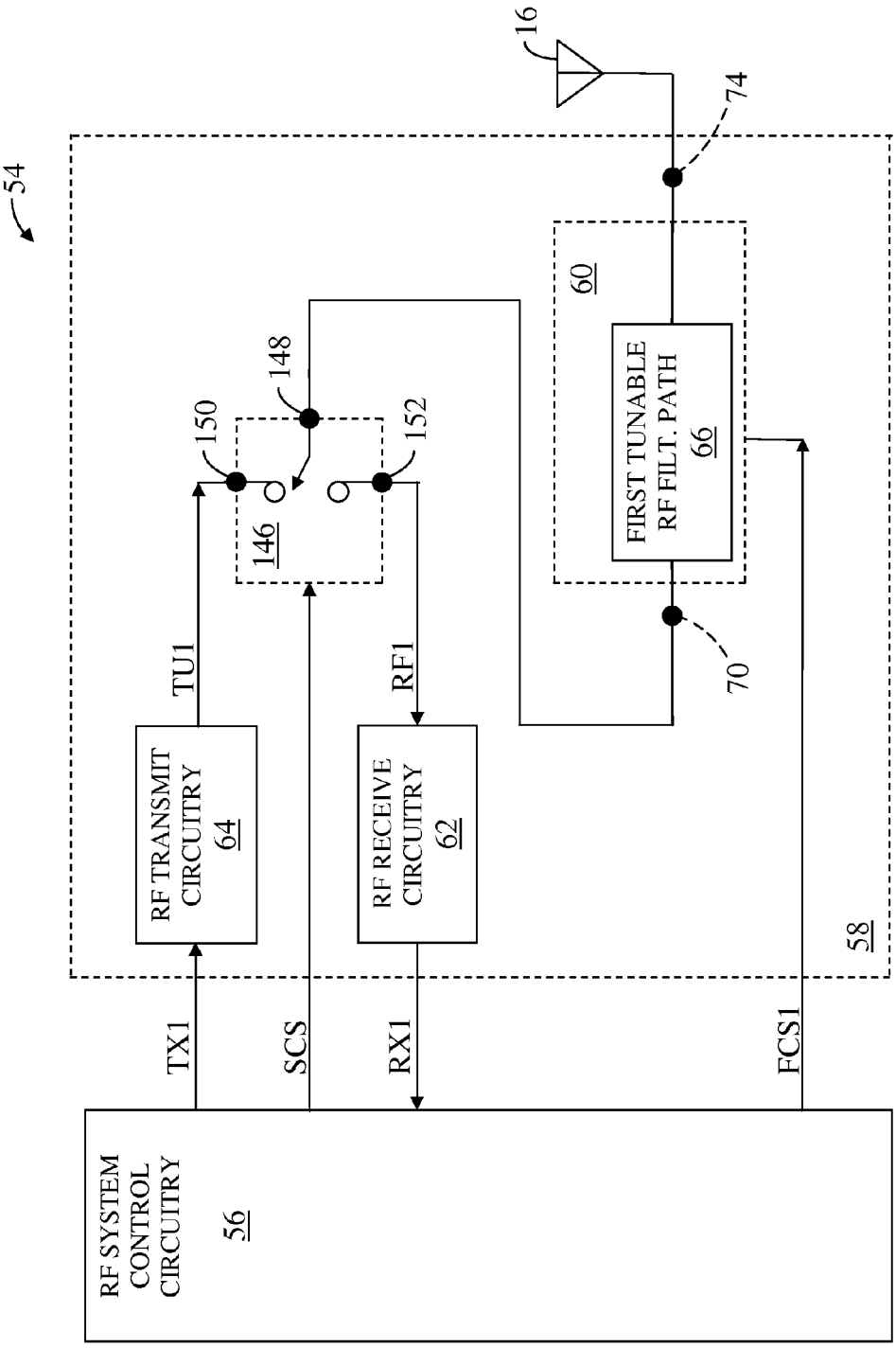
16
74
54
60
148
150
152
146
FIRST TUNABLE RF FILT. PATH 66
TU1
RF1
70
RF TRANSMIT CIRCUITRY 64
RF RECEIVE CIRCUITRY 62
58
TX1
SCS
RX1
FCS1
RF SYSTEM CONTROL CIRCUITRY 56

FIG. 20

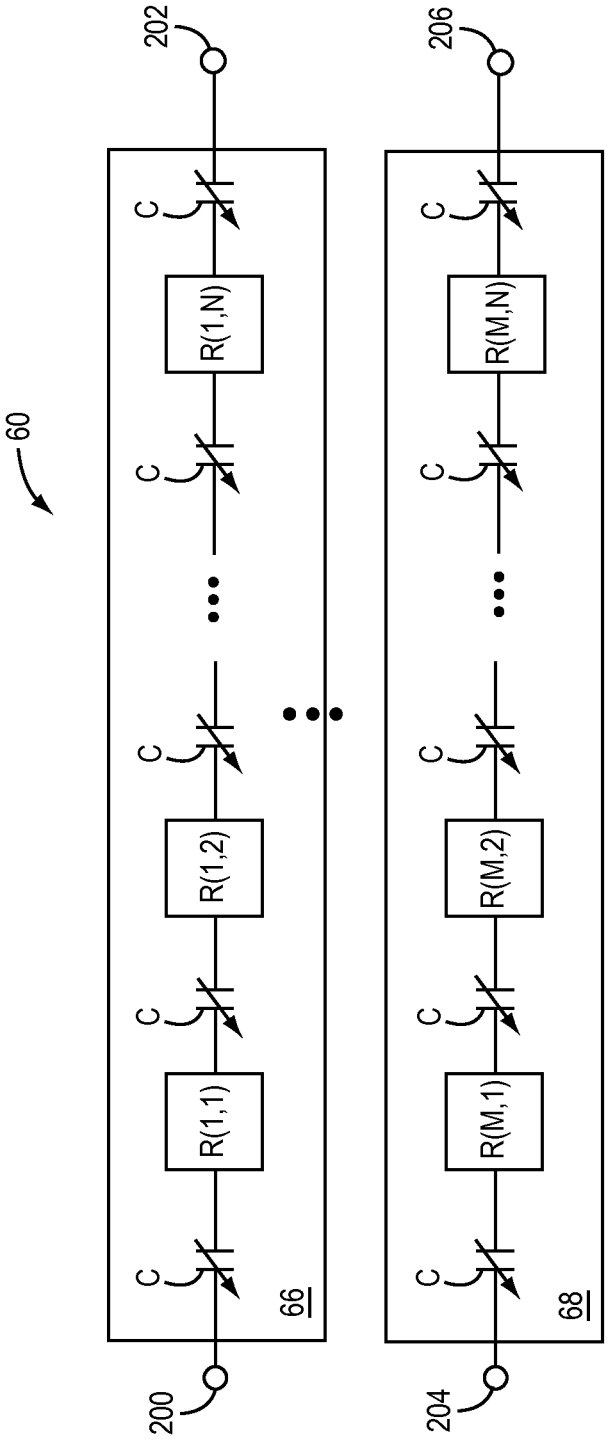

FIG. 21

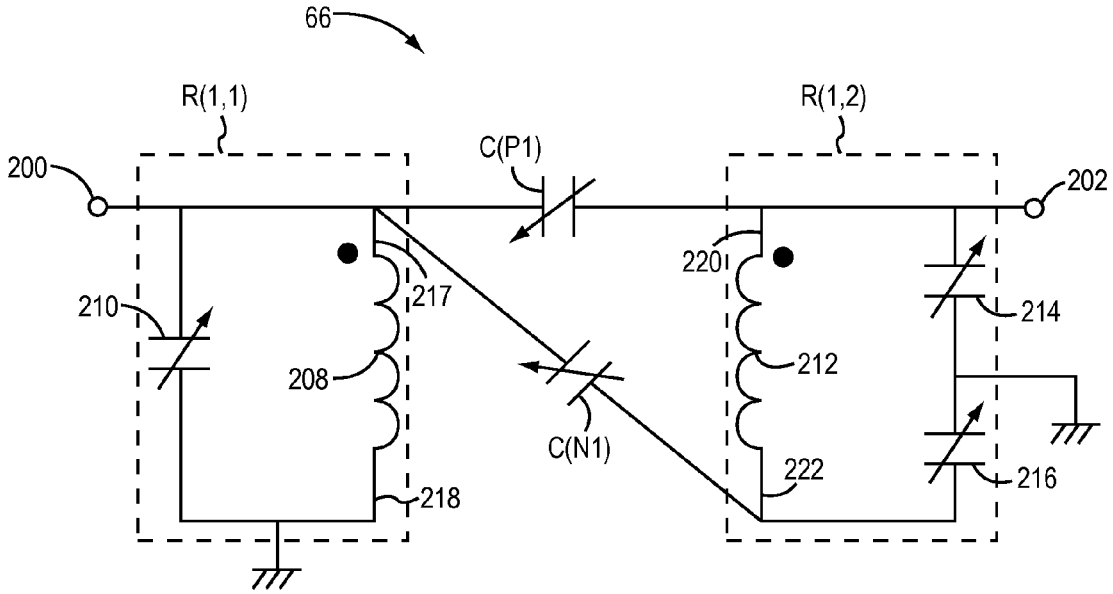

FIG. 22

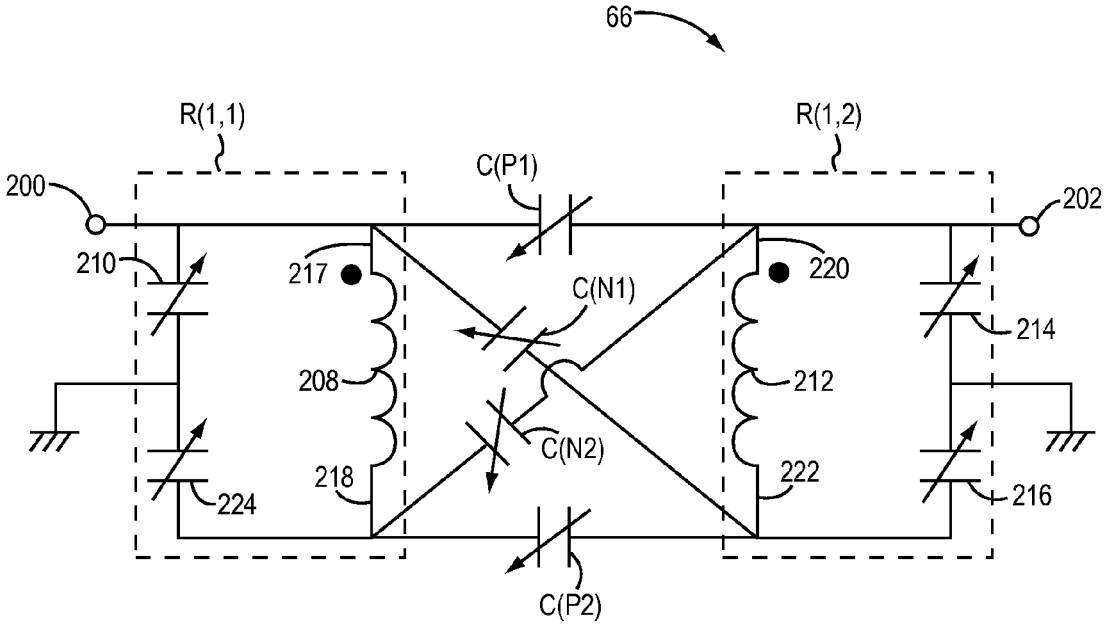
66
R(1,1)
R(1,2)
C(P1)
200
202
210
217
220
C(N1)
214
208
212
C(N2)
218
222
224
216
C(P2)

FIG. 23

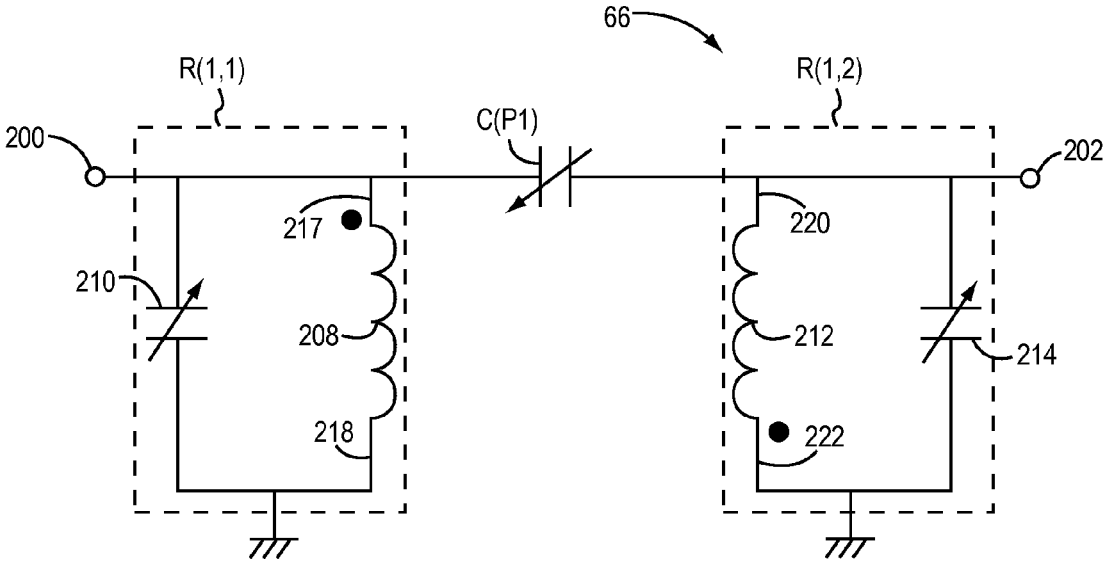

FIG. 24

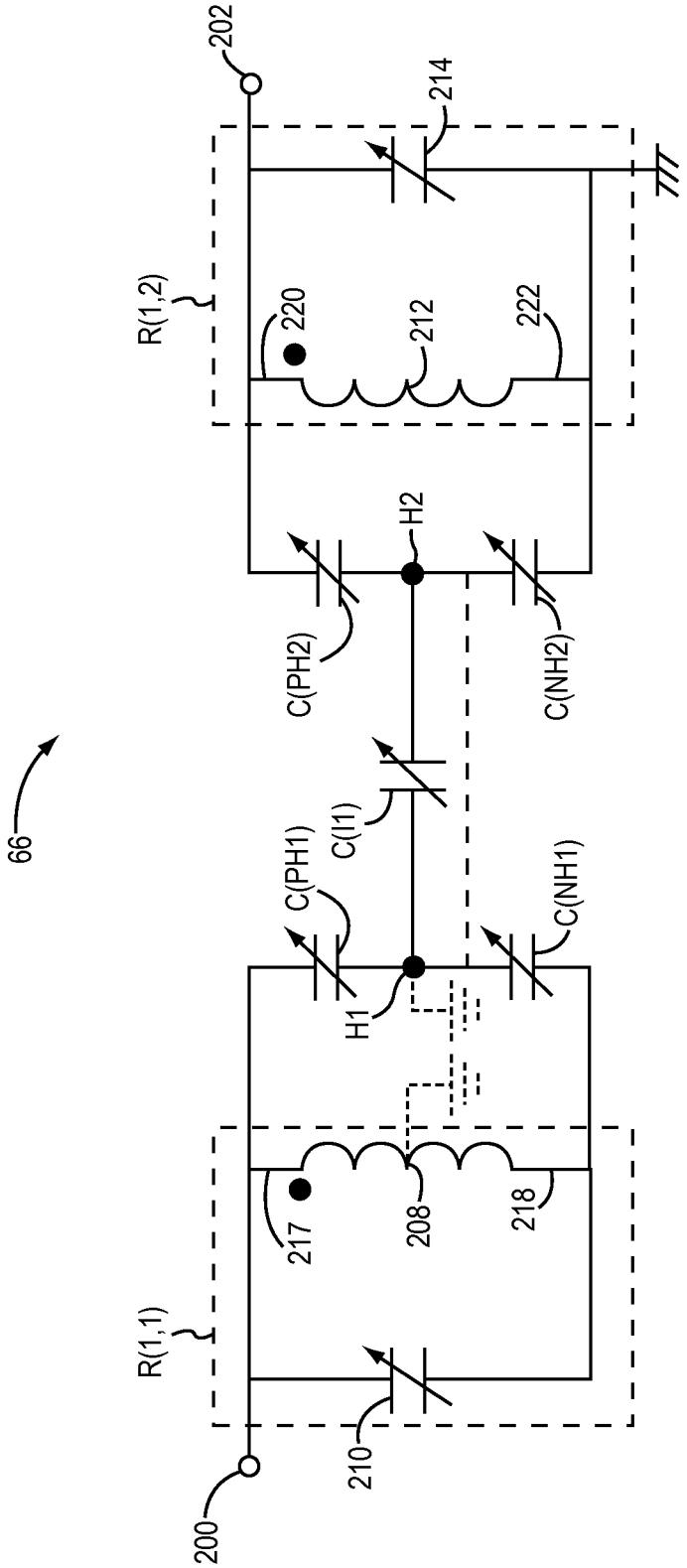
66
202
214
R(1,2)
220
212
222
H2
C(PH2)
C(NH2)
C(I1)
C(PH1)
C(NH1)
H1
217
208
218
R(1,1)
210
200

FIG. 25

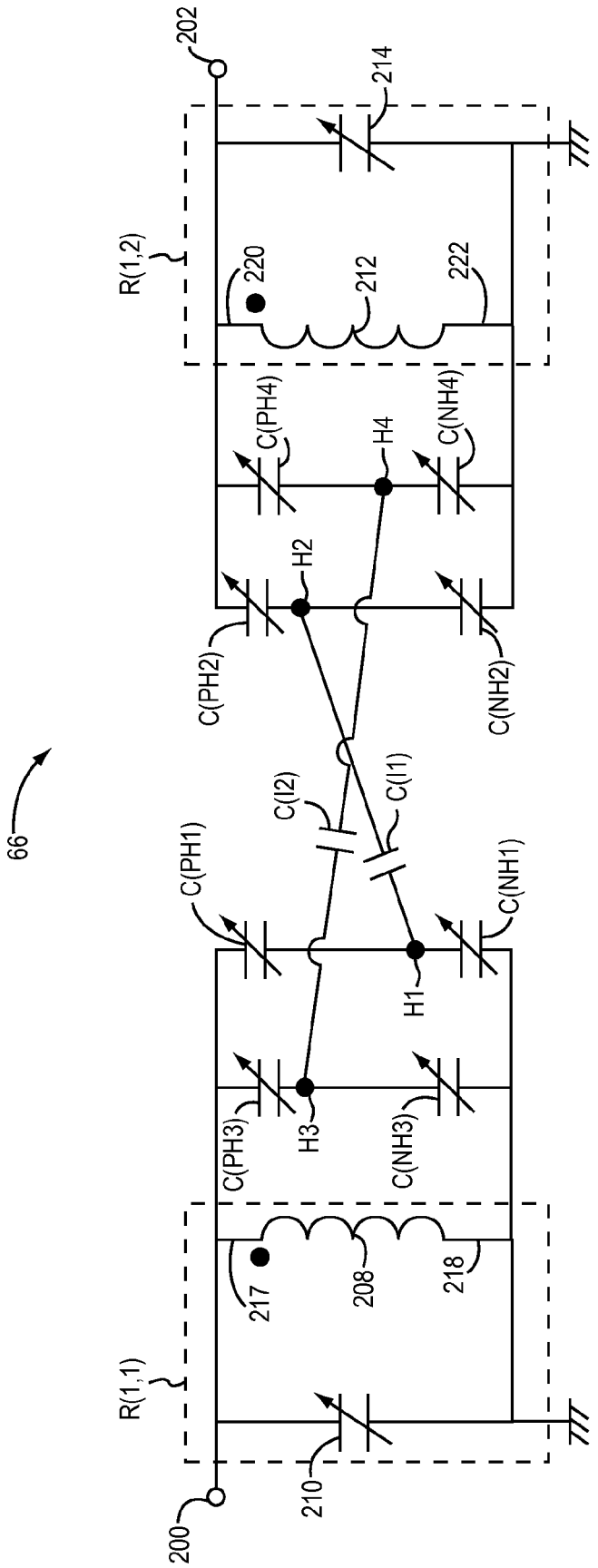
66
200
202
R(1,1)
R(1,2)
210
214
217
218
220
222
208
212
H1
H2
H3
H4
C(PH1)
C(PH2)
C(PH3)
C(PH4)
C(NH1)
C(NH2)
C(NH3)
C(NH4)
C(I1)
C(I2)

FIG. 26

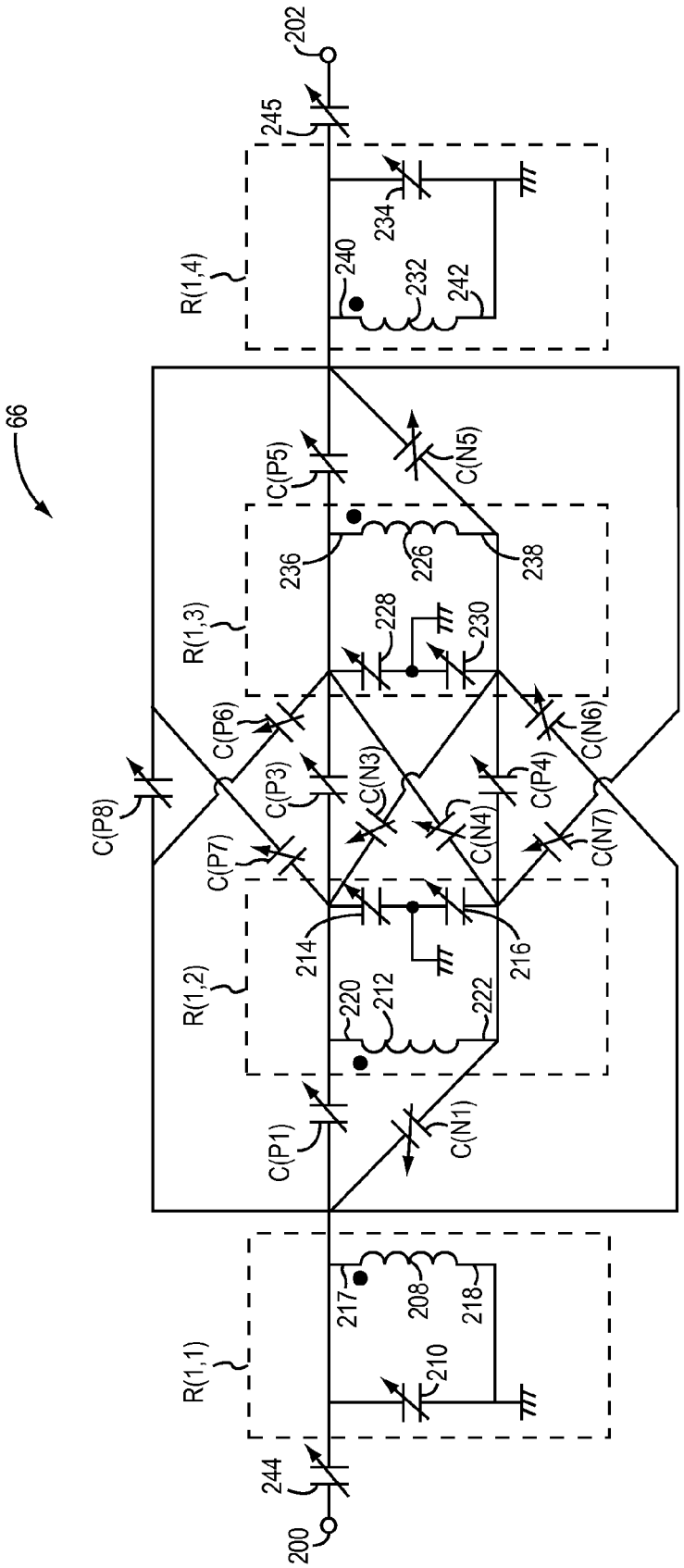
66
202
245
234
240
232
242
R(1,4)
C(P5)
C(N5)
236
226
238
R(1,3)
228
230
C(P6)
C(N6)
C(P8)
C(P3)
C(N3)
C(N4)
C(P4)
C(P7)
C(N7)
214
216
R(1,2)
220
212
222
C(P1)
C(N1)
217
208
218
R(1,1)
210
244
200

FIG. 27

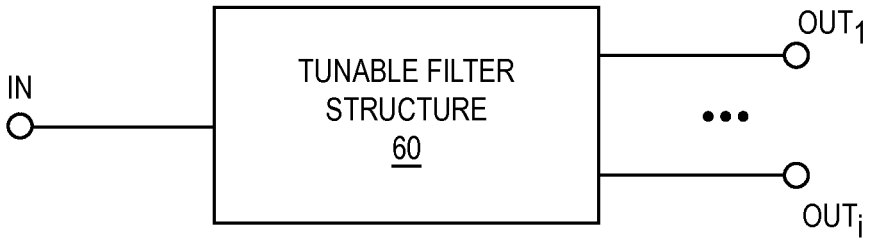

FIG. 28A

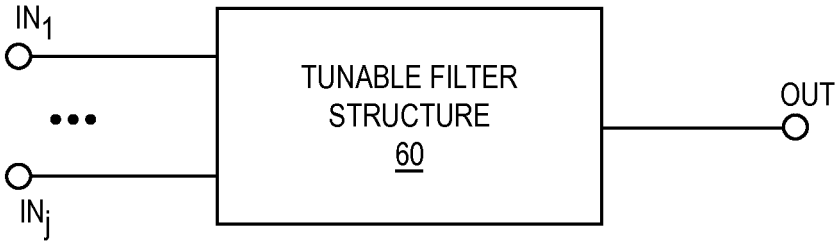

FIG. 28B

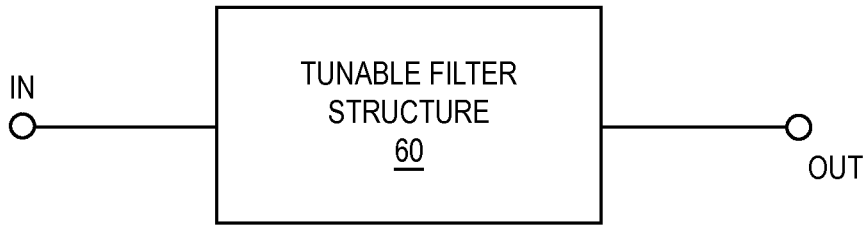

FIG. 28C

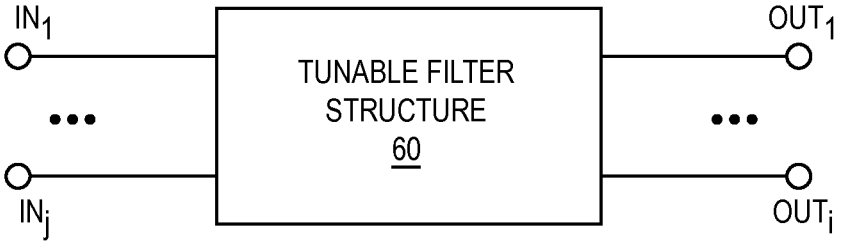

FIG. 28D

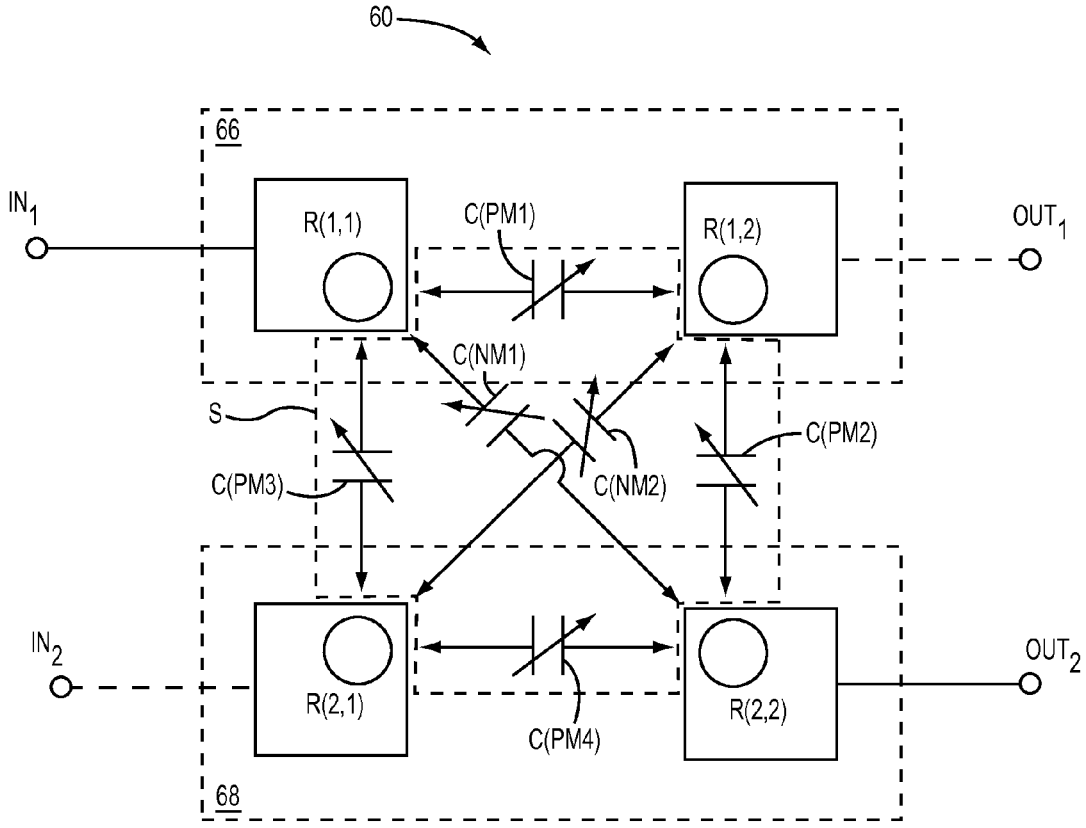
60
66
IN1
R(1,1)
C(PM1)
R(1,2)
OUT1
C(NM1)
S
C(PM2)
C(PM3)
C(NM2)
IN2
R(2,1)
R(2,2)
OUT2
C(PM4)
68

FIG. 29

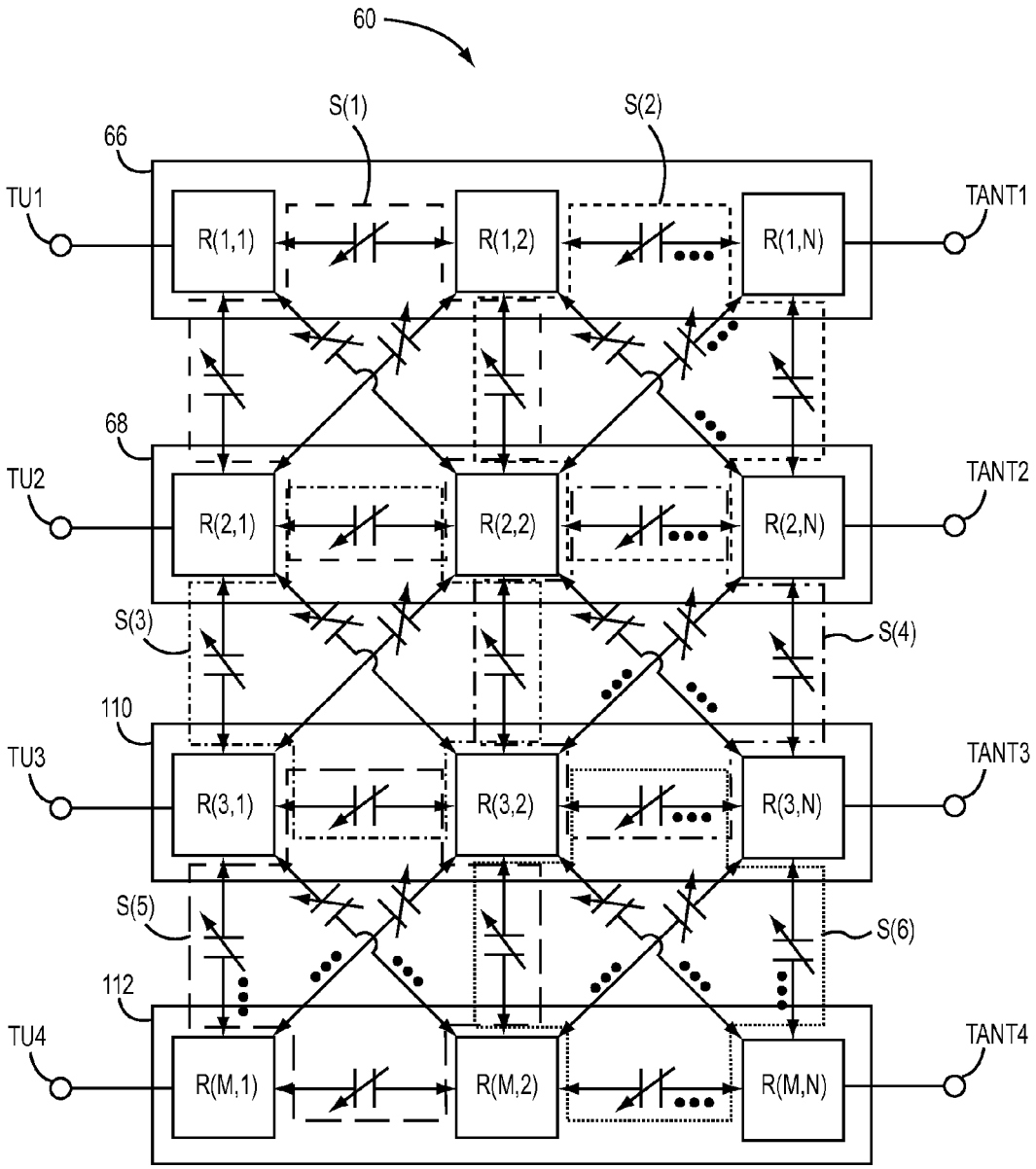
60
S(1)
S(2)
66
TU1
R(1,1)
R(1,2)
R(1,N)
TANT1
68
TU2
R(2,1)
R(2,2)
R(2,N)
TANT2
S(3)
S(4)
110
TU3
R(3,1)
R(3,2)
R(3,N)
TANT3
S(5)
S(6)
112
TU4
R(M,1)
R(M,2)
R(M,N)
TANT4

FIG. 30

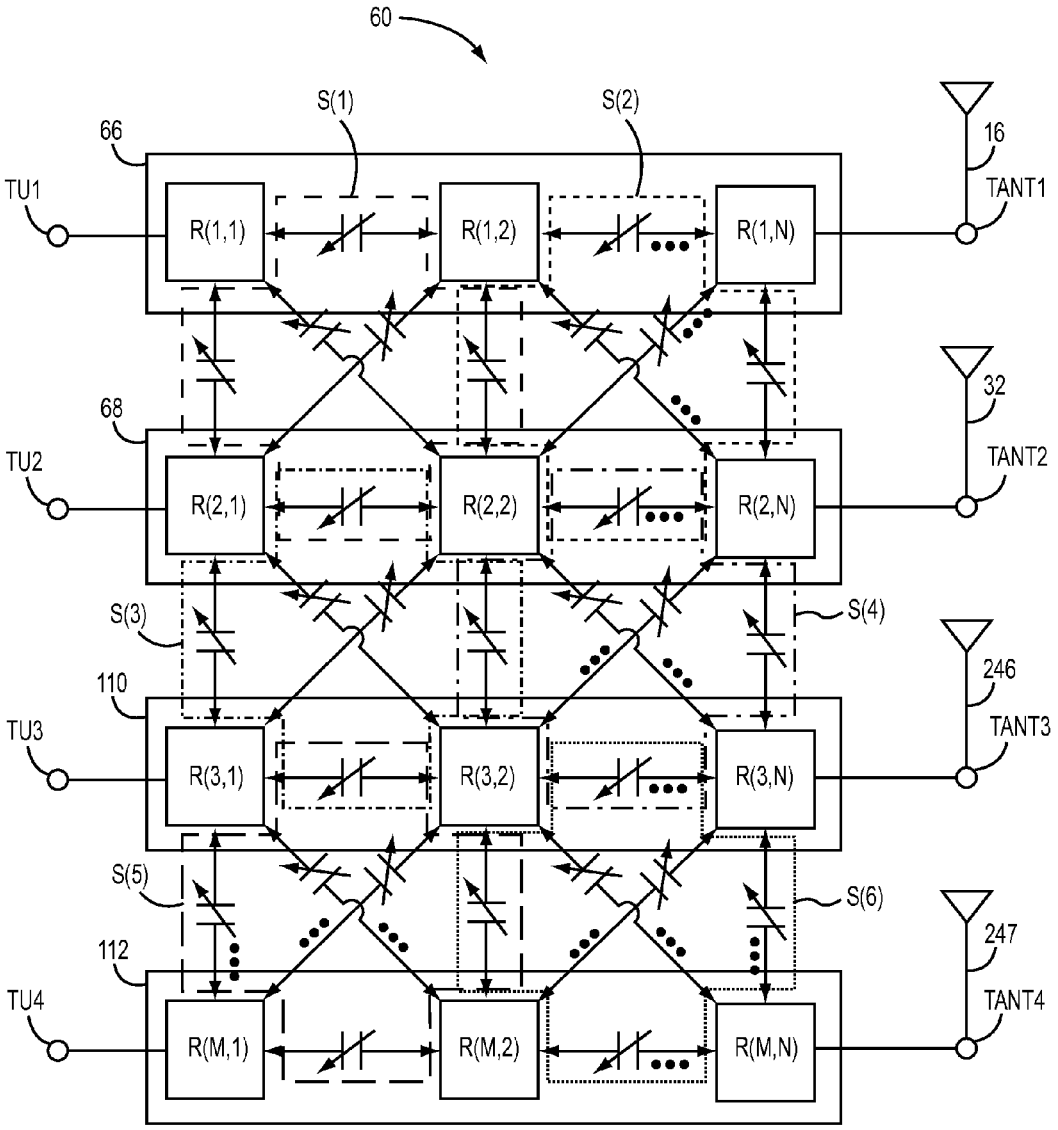
60
S(1)
S(2)
66
16
TU1
R(1,1)
R(1,2)
R(1,N)
TANT1
32
68
TU2
R(2,1)
R(2,2)
R(2,N)
TANT2
S(3)
S(4)
246
110
TU3
R(3,1)
R(3,2)
R(3,N)
TANT3
S(5)
S(6)
247
112
TU4
R(M,1)
R(M,2)
R(M,N)
TANT4

FIG. 31

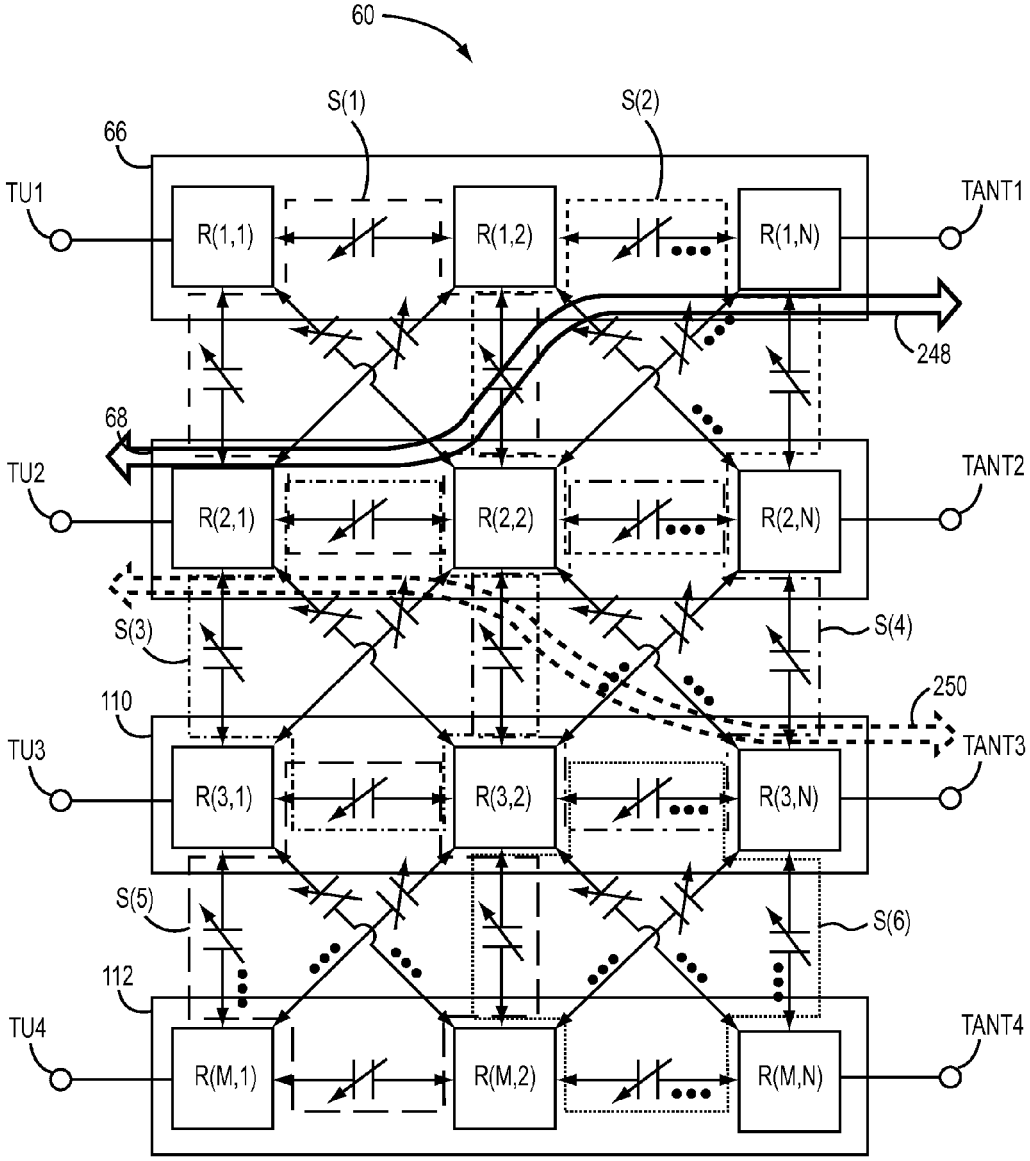
60
S(1)
S(2)
66
TU1
R(1,1)
R(1,2)
R(1,N)
TANT1
248
68
TU2
R(2,1)
R(2,2)
R(2,N)
TANT2
S(3)
S(4)
250
110
TU3
R(3,1)
R(3,2)
R(3,N)
TANT3
S(5)
S(6)
112
TU4
R(M,1)
R(M,2)
R(M,N)
TANT4

FIG. 32

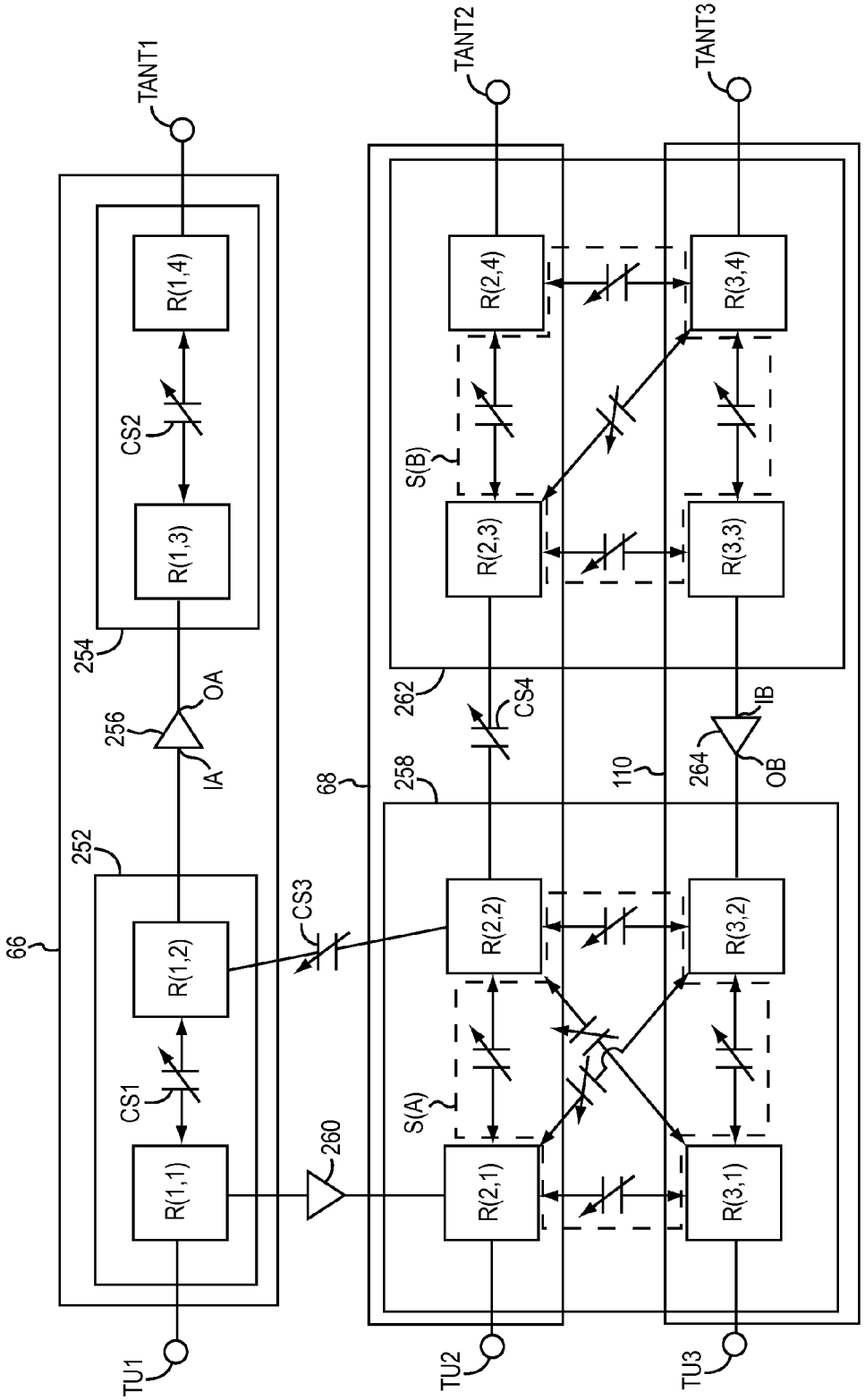
TANT1
TANT2
TANT3
R(1,4)
R(1,3)
R(1,2)
R(1,1)
R(2,4)
R(2,3)
R(2,2)
R(2,1)
R(3,4)
R(3,3)
R(3,2)
R(3,1)
CS1
CS2
CS3
CS4
S(A)
S(B)
OA
IA
IB
OB
254
256
252
66
68
258
260
262
110
264
TU1
TU2
TU3

FIG. 33

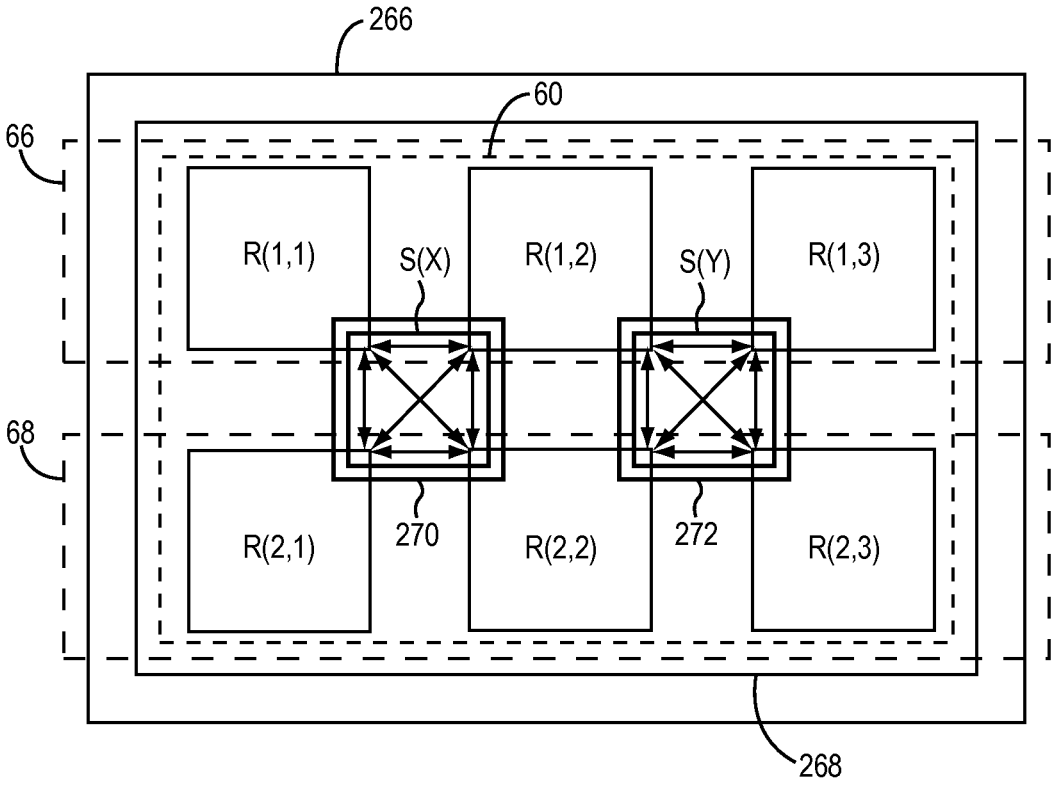

FIG. 34

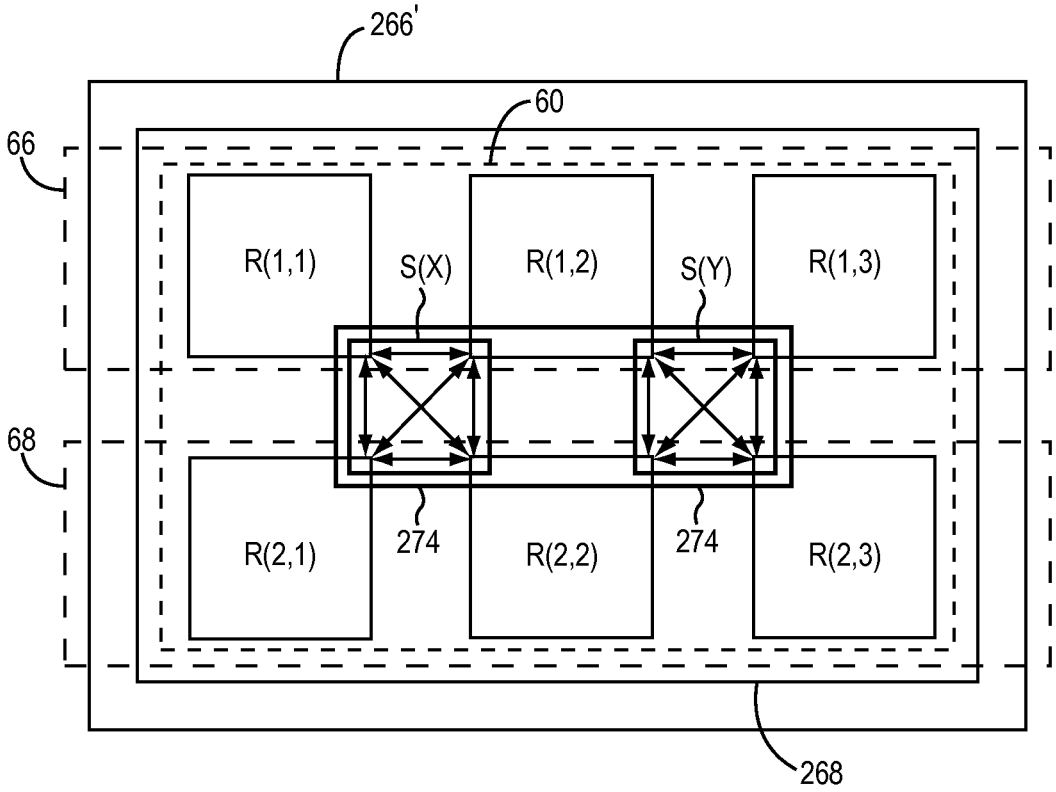

FIG. 35

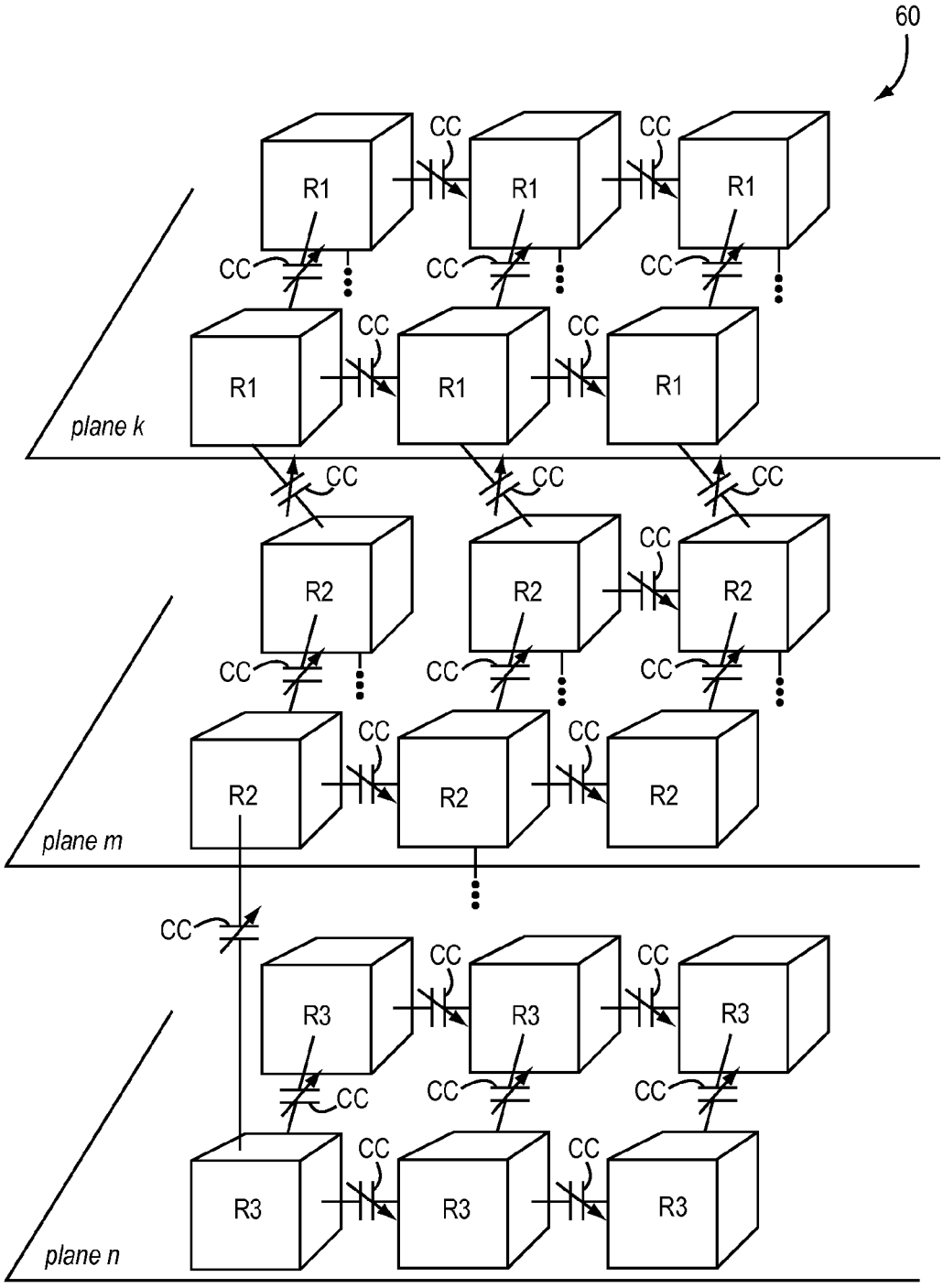

FIG. 36

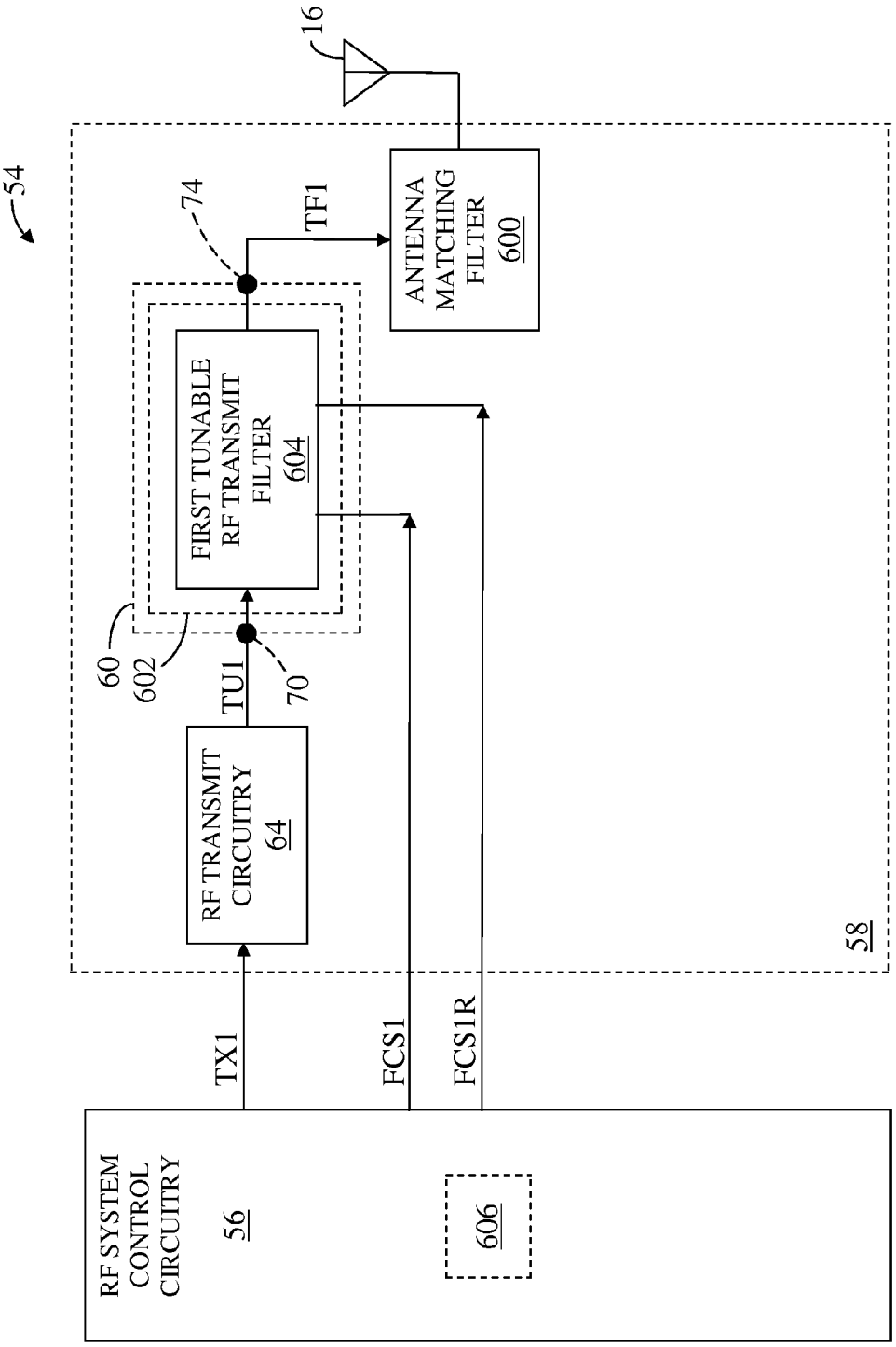
16
54
74
TF1
ANTENNA MATCHING FILTER 600
FIRST TUNABLE RF TRANSMIT FILTER 604
60
602
TU1
70
RF TRANSMIT CIRCUITRY 64
58
TX1
FCS1
FCS1R
RF SYSTEM CONTROL CIRCUITRY 56
606

FIG. 37

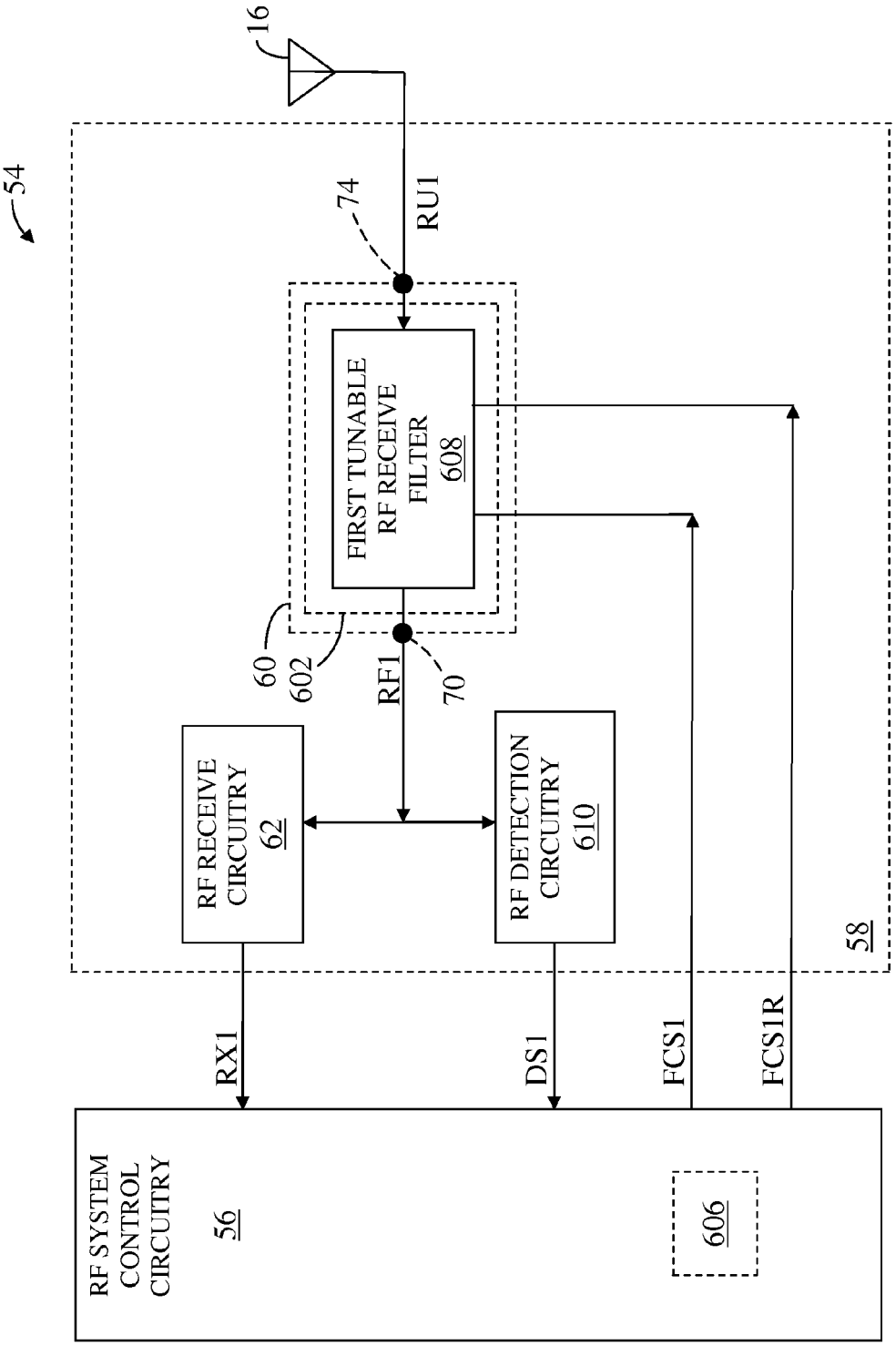
16
54
74
RU1
FIRST TUNABLE RF RECEIVE FILTER 608
60
602
RF1
70
RF RECEIVE CIRCUITRY 62
RF DETECTION CIRCUITRY 610
58
RX1
DS1
FCS1
FCS1R
RF SYSTEM CONTROL CIRCUITRY 56
606

FIG. 38

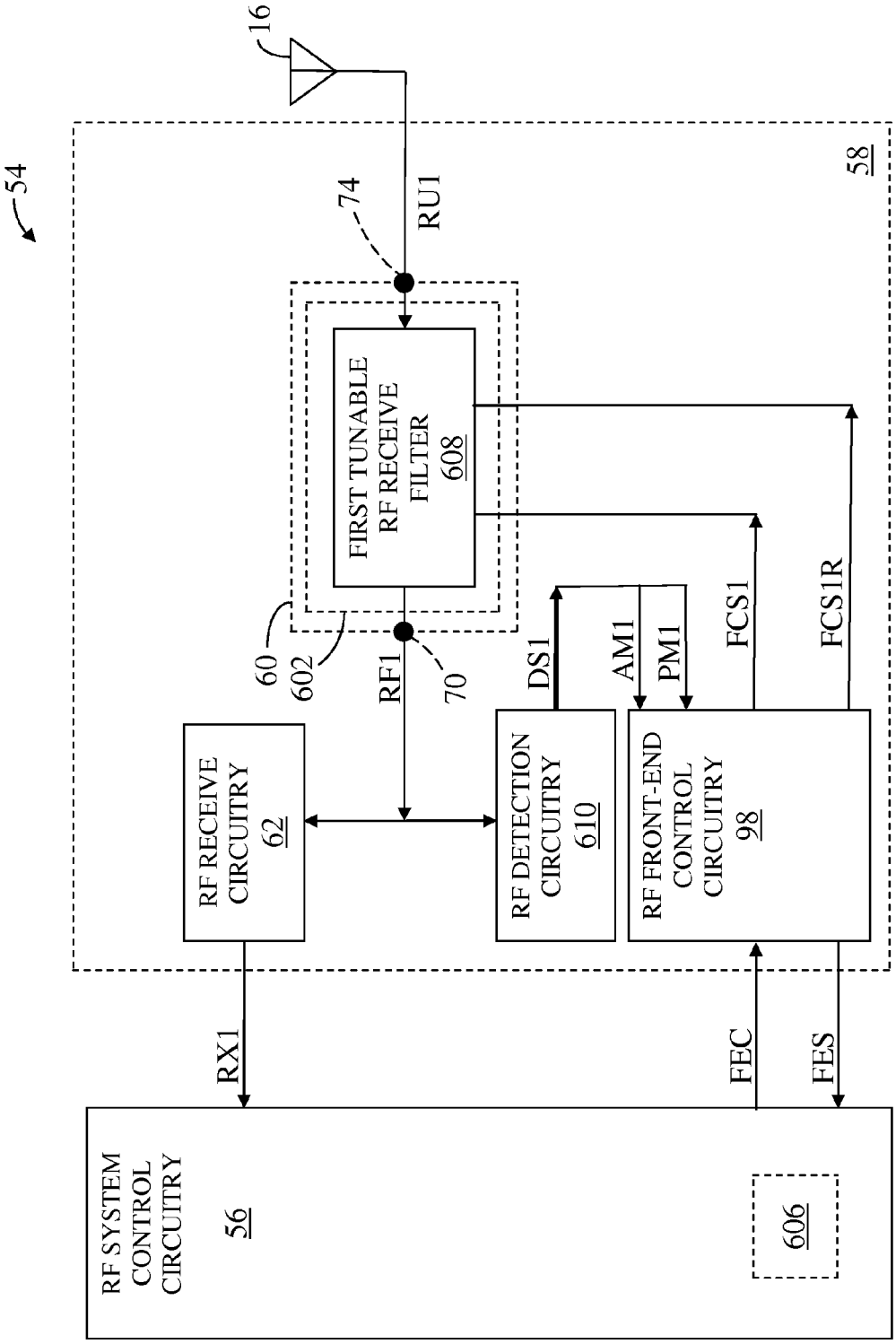
54
16
58
74
RU1
FIRST TUNABLE RF RECEIVE FILTER 608
60
602
RF1
70
DS1
AM1
PM1
FCS1
FCS1R
RF RECEIVE CIRCUITRY 62
RF DETECTION CIRCUITRY 610
RF FRONT-END CONTROL CIRCUITRY 98
RX1
FEC
FES
RF SYSTEM CONTROL CIRCUITRY 56
606

FIG. 39

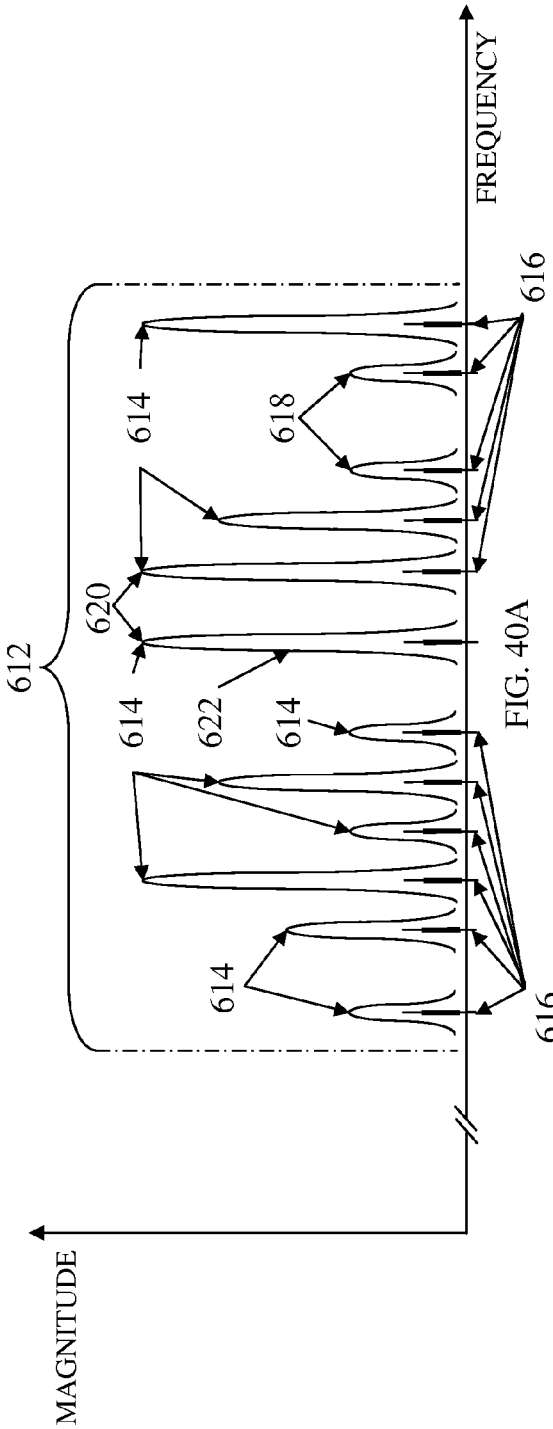

FIG. 40A

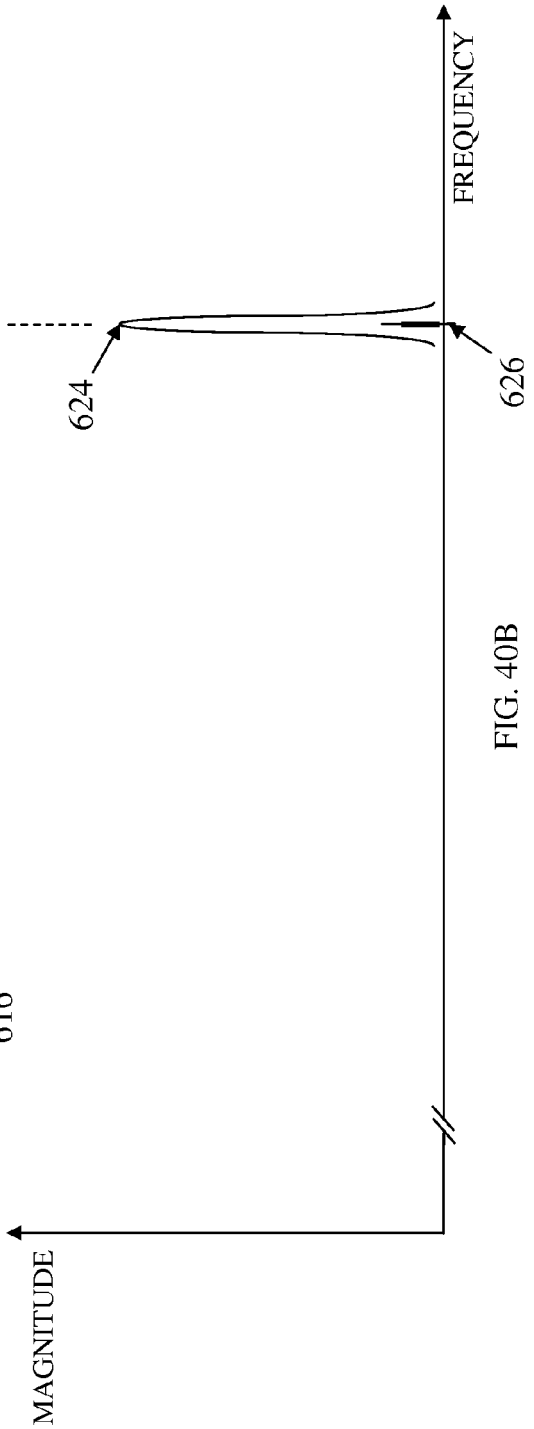

FIG. 40B

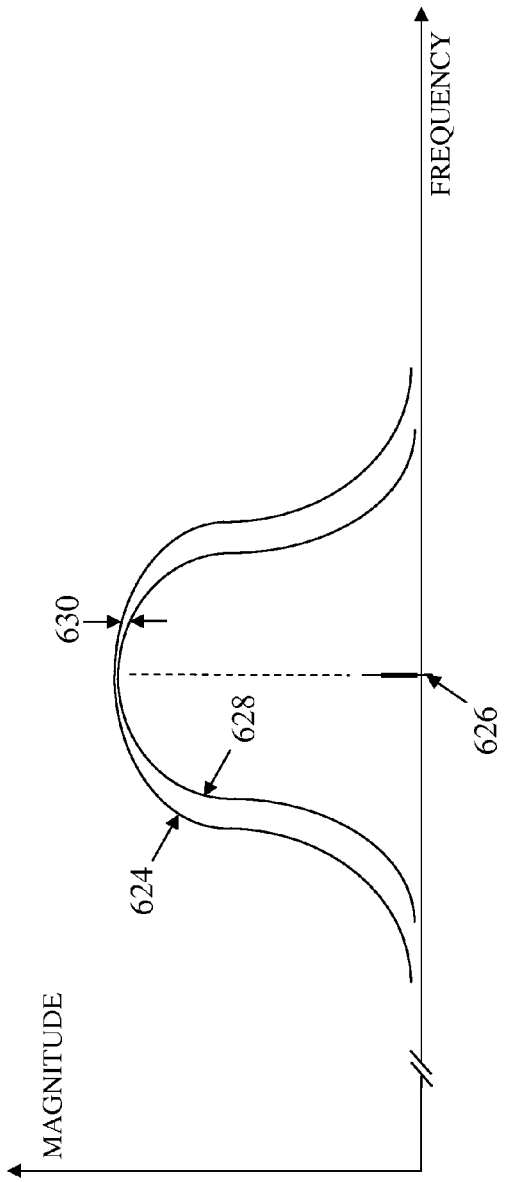

FIG. 41A

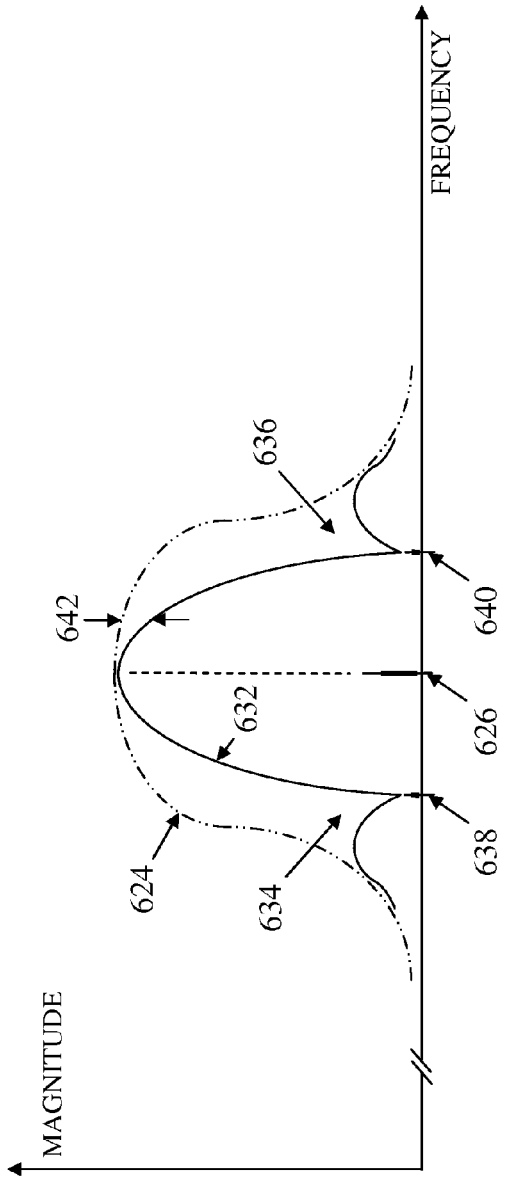

FIG. 41B

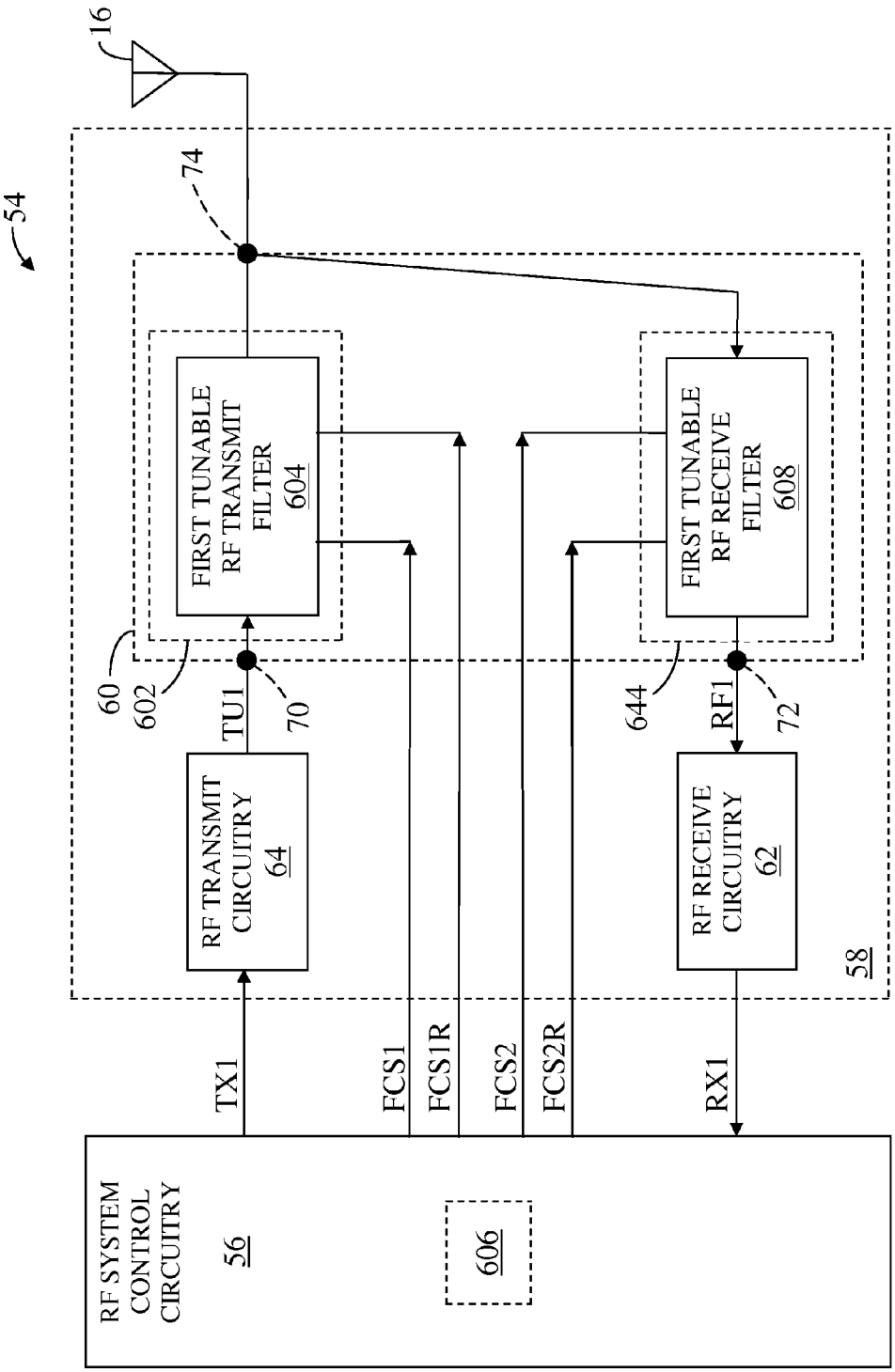
16
74
54
FIRST TUNABLE RF TRANSMIT FILTER 604
FIRST TUNABLE RF RECEIVE FILTER 608
60
602
TU1
70
644
RF1
72
RF TRANSMIT CIRCUITRY 64
RF RECEIVE CIRCUITRY 62
58
TX1
FCS1
FCS1R
FCS2
FCS2R
RX1
RF SYSTEM CONTROL CIRCUITRY 56
606

FIG. 42

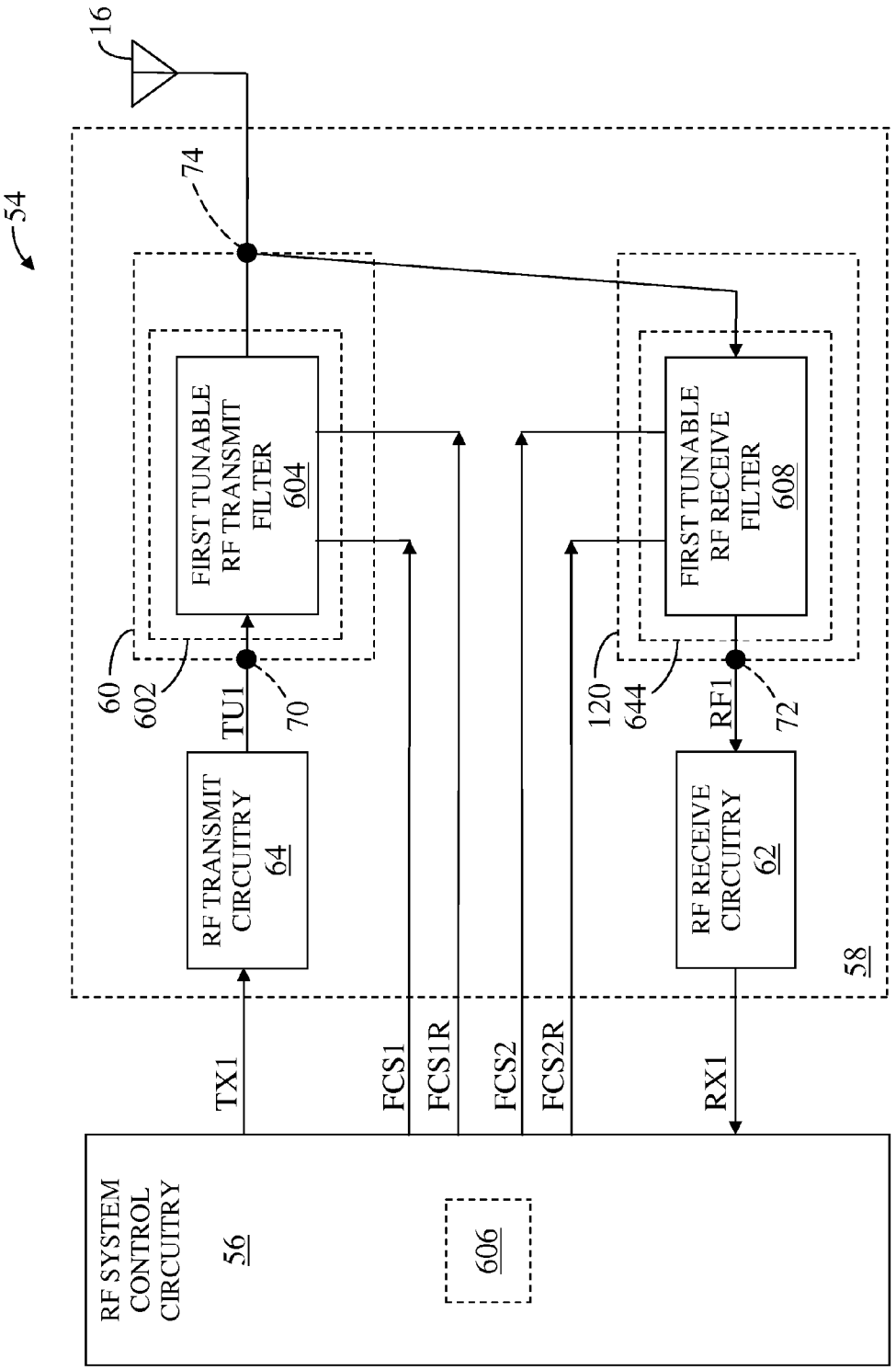
54
16
74
FIRST TUNABLE RF TRANSMIT FILTER 604
FIRST TUNABLE RF RECEIVE FILTER 608
60
602
TU1
70
120
644
RF1
72
RF TRANSMIT CIRCUITRY 64
RF RECEIVE CIRCUITRY 62
58
TX1
FCS1
FCS1R
FCS2
FCS2R
RX1
RF SYSTEM CONTROL CIRCUITRY 56
606

FIG. 43

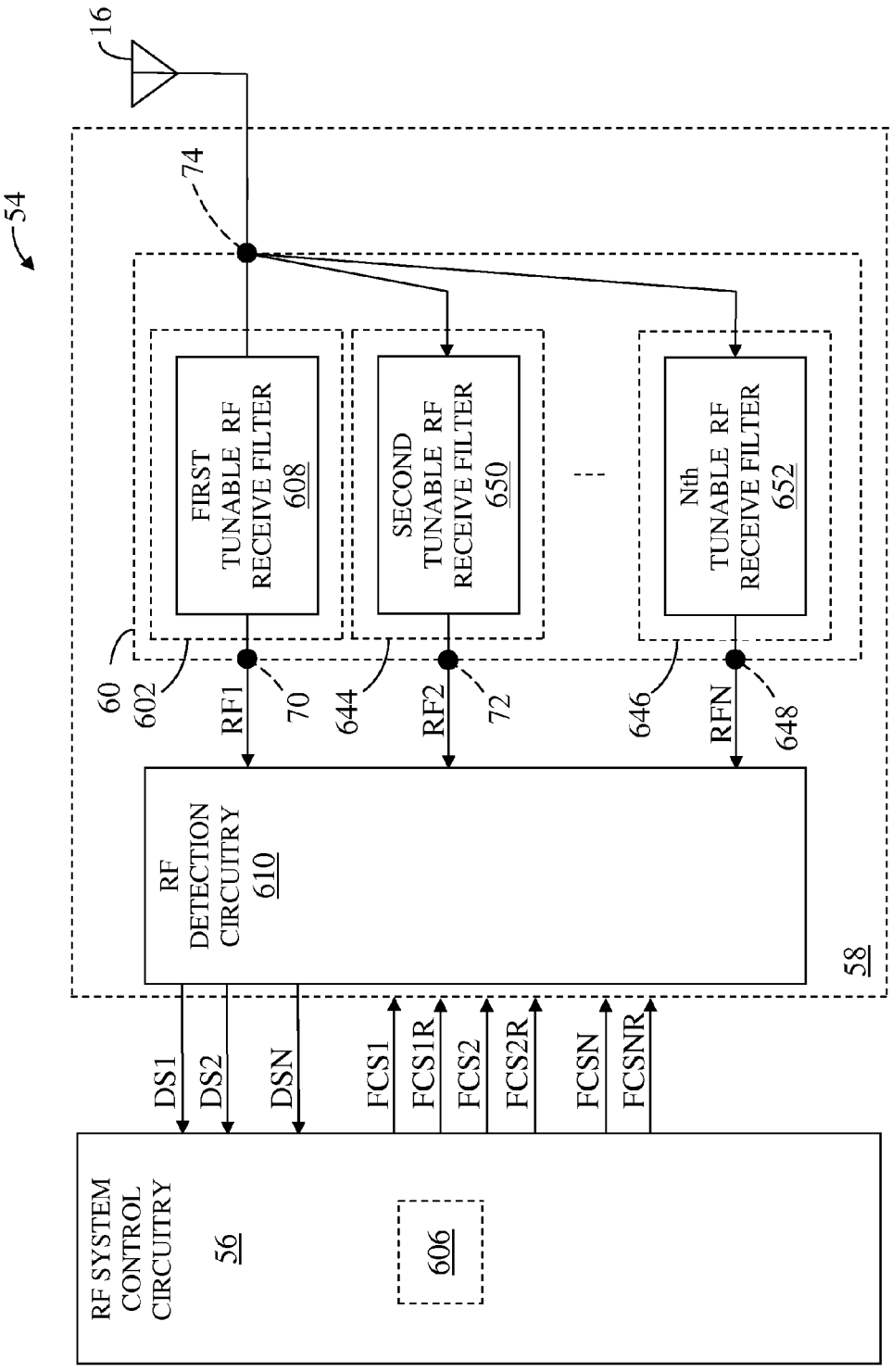
16
54
74
FIRST TUNABLE RF RECEIVE FILTER 608
SECOND TUNABLE RF RECEIVE FILTER 650
Nth TUNABLE RF RECEIVE FILTER 652
60
602
RF1
70
644
RF2
72
646
RFN
648
RF DETECTION CIRCUITRY 610
58
DS1
DS2
DSN
FCS1
FCS1R
FCS2
FCS2R
FCSN
FCSNR
RF SYSTEM CONTROL CIRCUITRY 56
606

FIG. 44

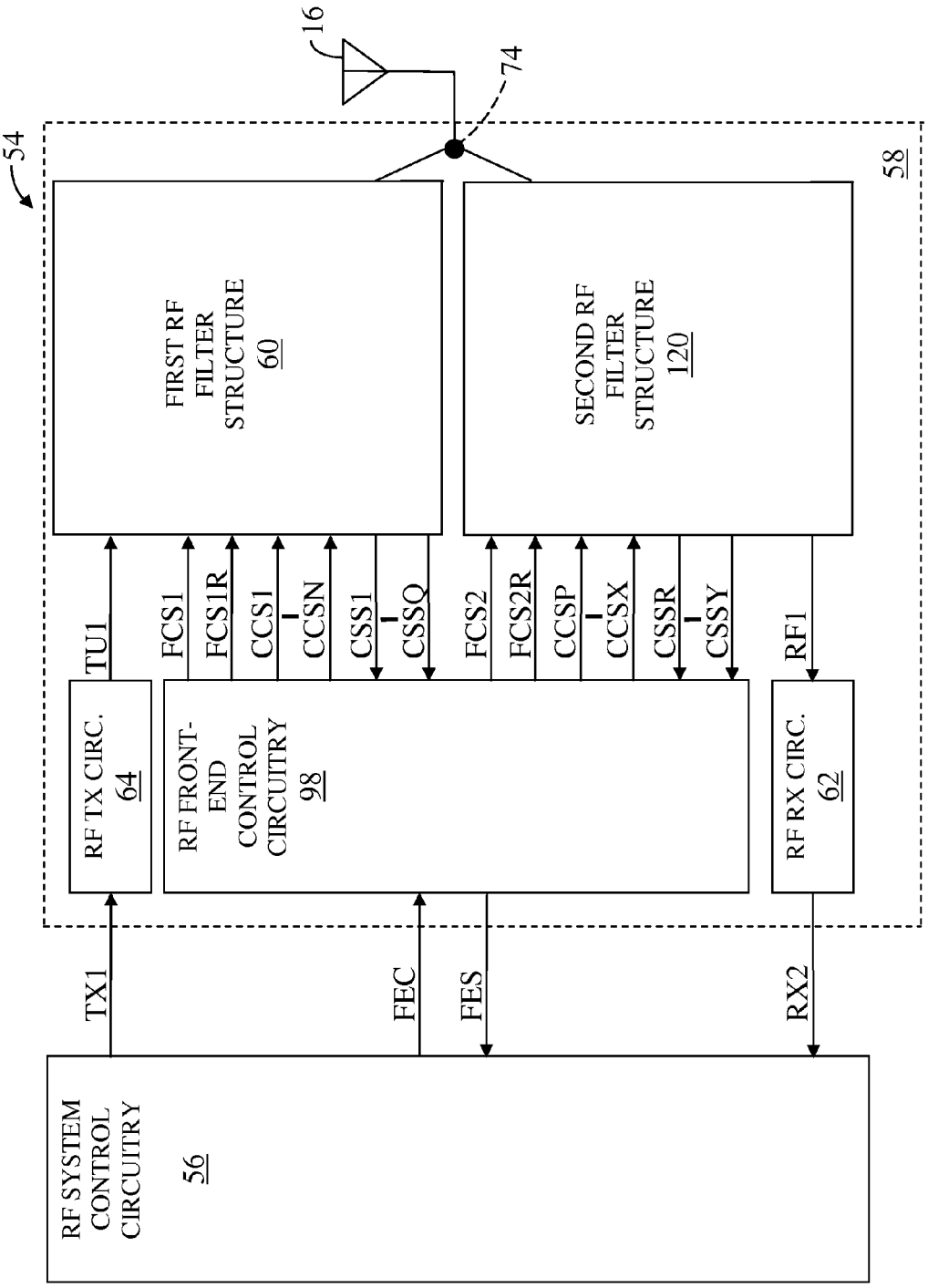
16
74
54
58
FIRST RF FILTER STRUCTURE 60
SECOND RF FILTER STRUCTURE 120
TU1
FCS1
FCS1R
CCS1
CCSN
CSS1
CSSQ
FCS2
FCS2R
CCSP
CCSX
CSSR
CSSY
RF1
RF TX CIRC. 64
RF FRONT-END CONTROL CIRCUITRY 98
RF RX CIRC. 62
TX1
FEC
FES
RX2
RF SYSTEM CONTROL CIRCUITRY 56

FIG. 45

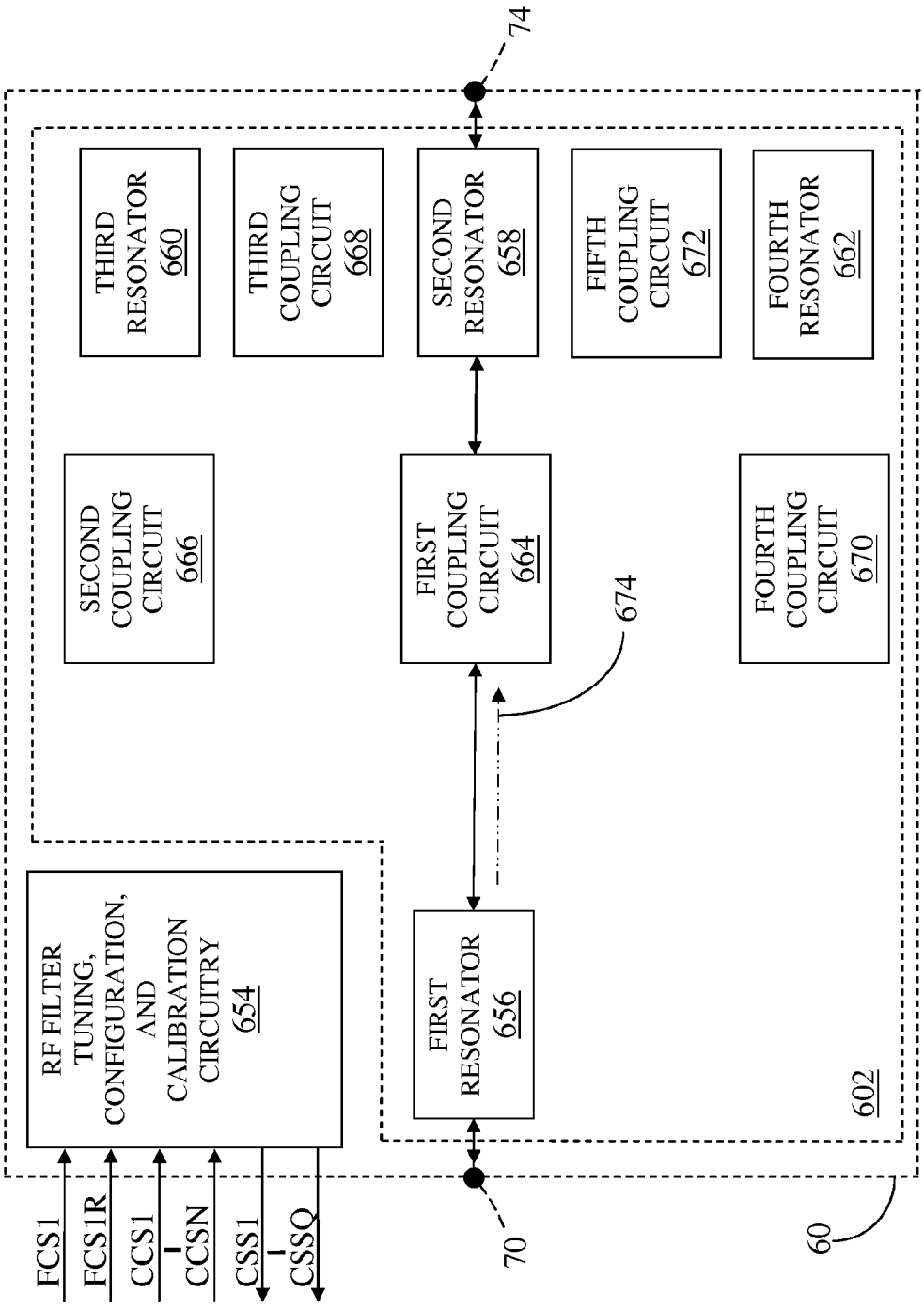
74
THIRD RESONATOR 660
THIRD COUPLING CIRCUIT 668
SECOND RESONATOR 658
FIFTH COUPLING CIRCUIT 672
FOURTH RESONATOR 662
SECOND COUPLING CIRCUIT 666
FIRST COUPLING CIRCUIT 664
674
FOURTH COUPLING CIRCUIT 670
RF FILTER TUNING, CONFIGURATION, AND CALIBRATION CIRCUITRY 654
FIRST RESONATOR 656
602
FCS1
FCS1R
CCS1
CCSN
CSS1
CSSQ
70
60

FIG. 46

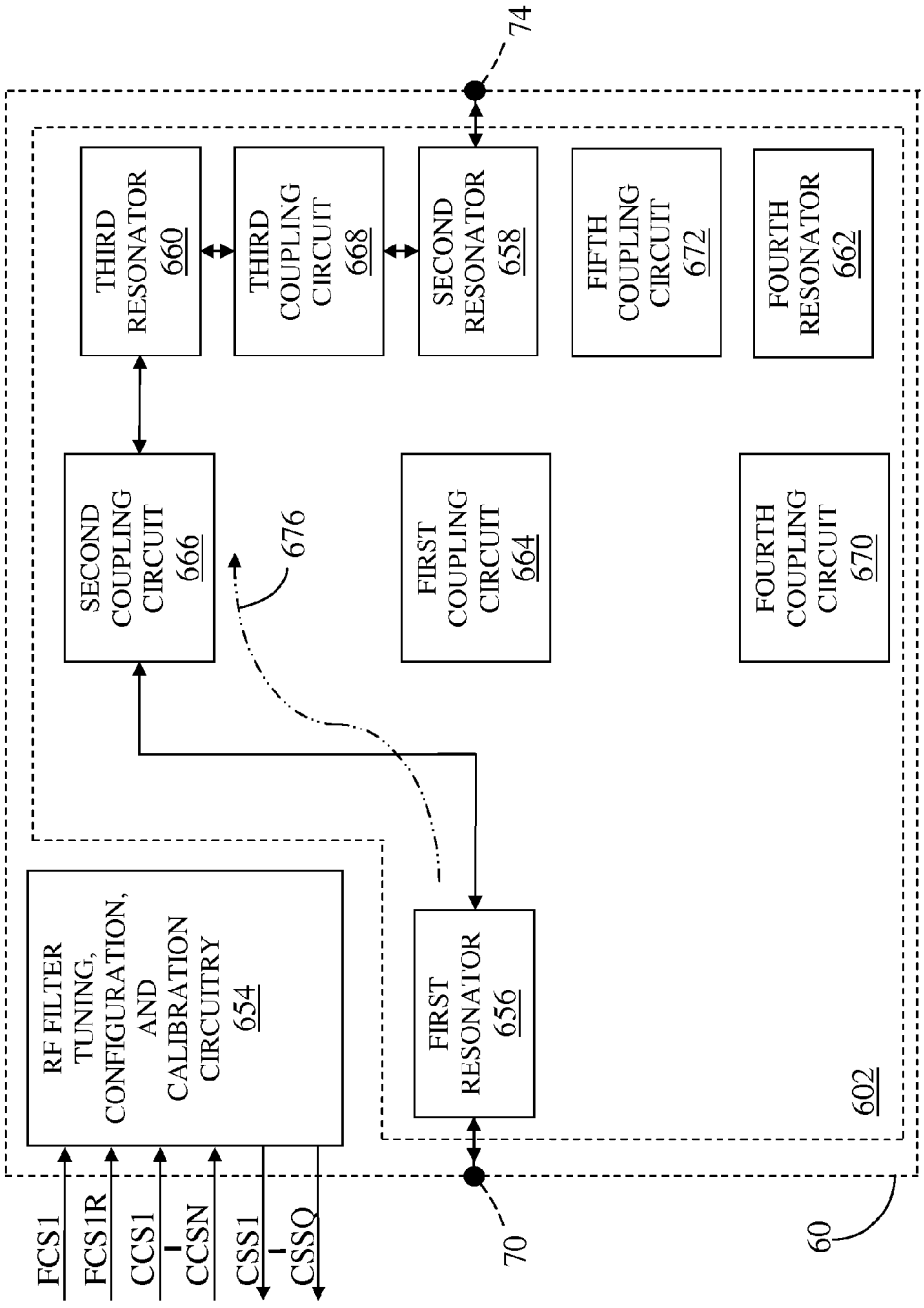
74
THIRD RESONATOR 660
THIRD COUPLING CIRCUIT 668
SECOND RESONATOR 658
FIFTH COUPLING CIRCUIT 672
FOURTH RESONATOR 662
SECOND COUPLING CIRCUIT 666
676
FIRST COUPLING CIRCUIT 664
FOURTH COUPLING CIRCUIT 670
RF FILTER TUNING, CONFIGURATION, AND CALIBRATION CIRCUITRY 654
FIRST RESONATOR 656
602
FCS1
FCS1R
CCS1
CCSN
CSS1
CSSQ
70
60

FIG. 47

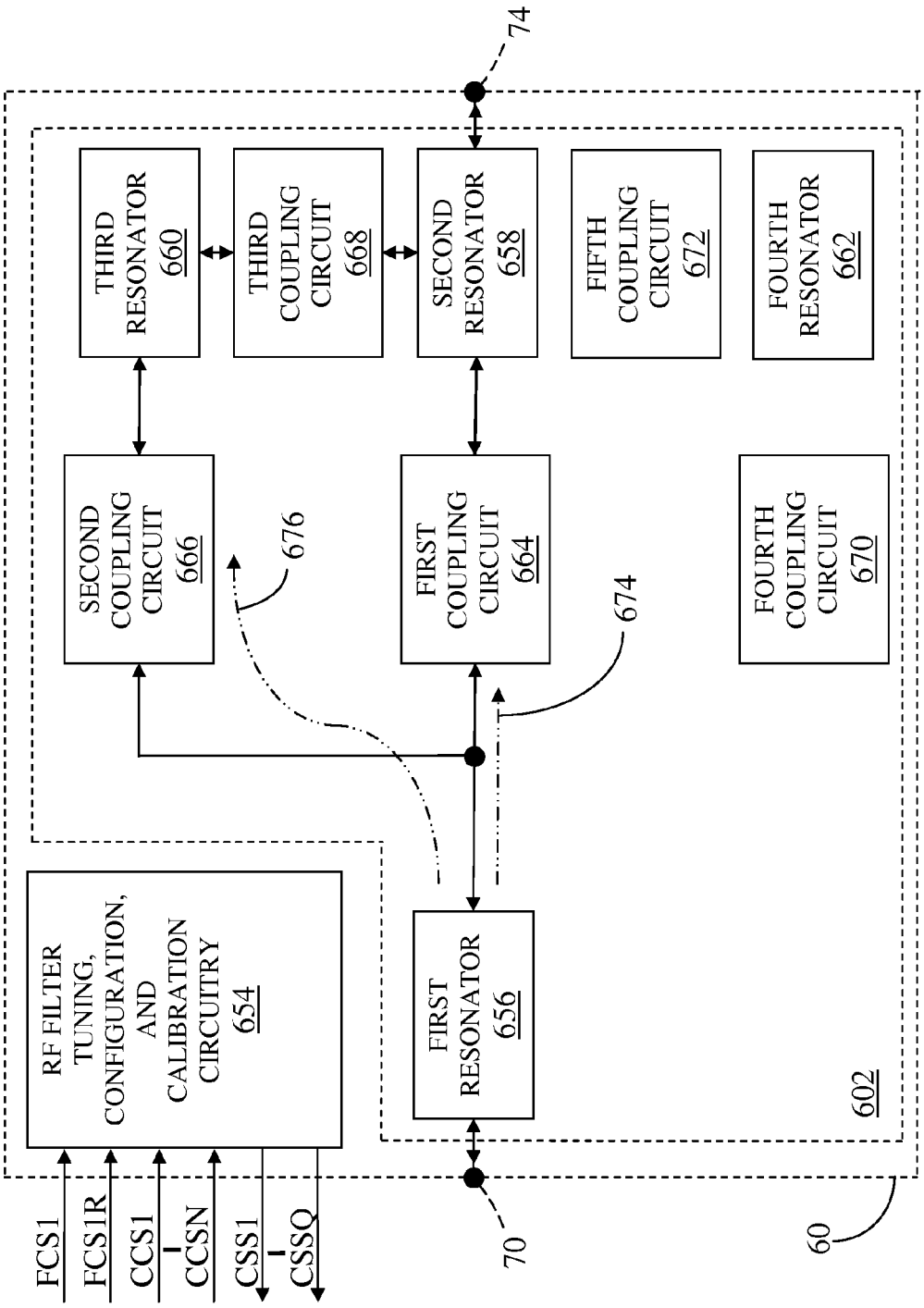
74
THIRD RESONATOR 660
THIRD COUPLING CIRCUIT 668
SECOND RESONATOR 658
FIFTH COUPLING CIRCUIT 672
FOURTH RESONATOR 662
SECOND COUPLING CIRCUIT 666
676
FIRST COUPLING CIRCUIT 664
674
FOURTH COUPLING CIRCUIT 670
RF FILTER TUNING, CONFIGURATION, AND CALIBRATION CIRCUITRY 654
FIRST RESONATOR 656
602
FCS1
FCS1R
CCS1
CCSN
CSS1
CSSQ
70
60

FIG. 48

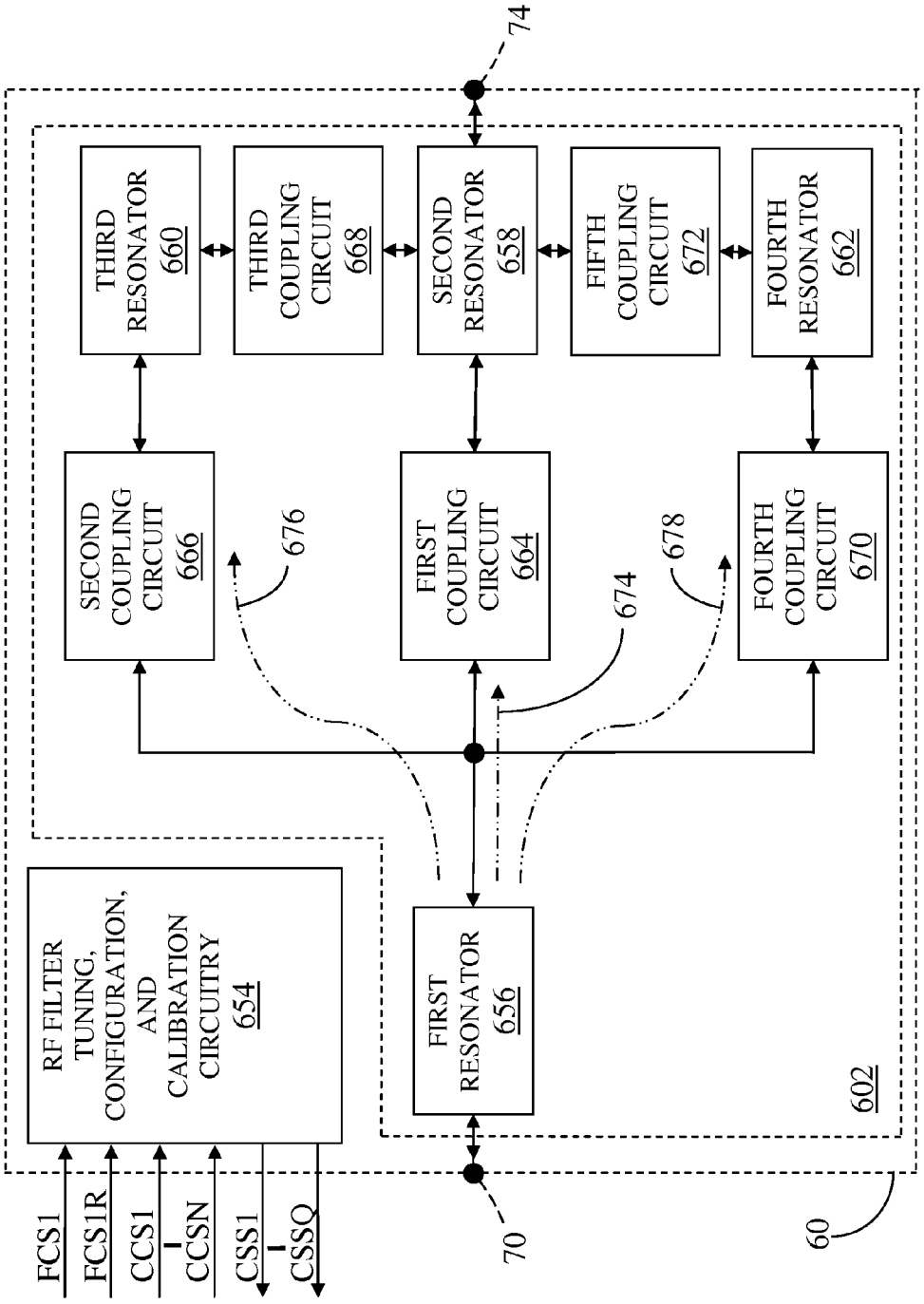
74
THIRD RESONATOR 660
THIRD COUPLING CIRCUIT 668
SECOND RESONATOR 658
FIFTH COUPLING CIRCUIT 672
FOURTH RESONATOR 662
SECOND COUPLING CIRCUIT 666
676
FIRST COUPLING CIRCUIT 664
674
678
FOURTH COUPLING CIRCUIT 670
RF FILTER TUNING, CONFIGURATION, AND CALIBRATION CIRCUITRY 654
FIRST RESONATOR 656
602
FCS1
FCS1R
CCS1
CCSN
CSS1
CSSQ
70
60

FIG. 49

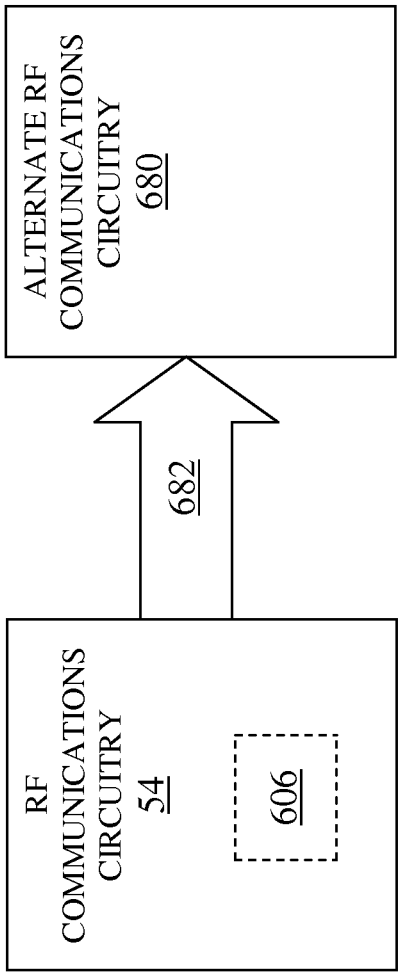
ALTERNATE RF COMMUNICATIONS CIRCUITRY
680
682
RF COMMUNICATIONS CIRCUITRY
54
606

FIG. 50

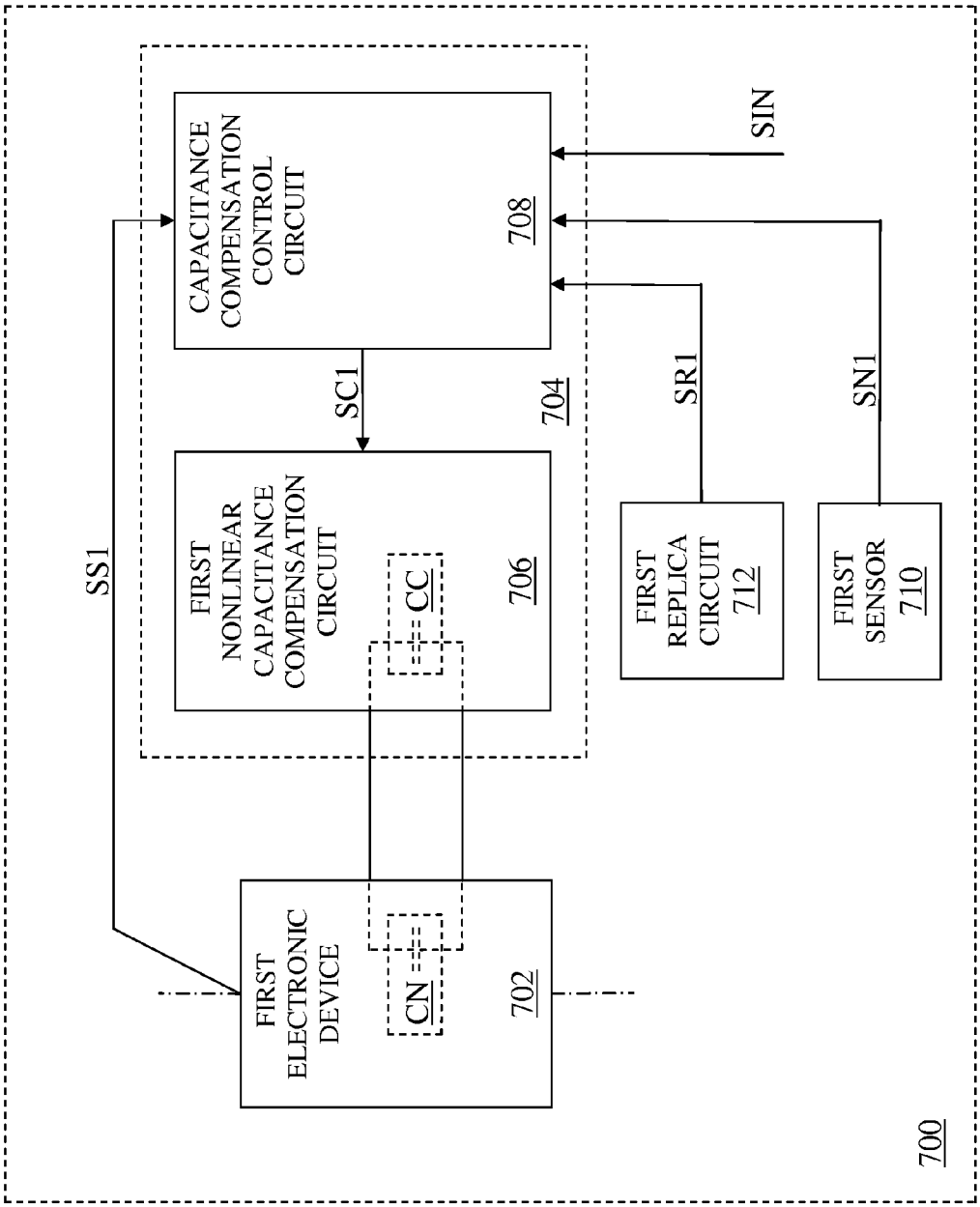
700
FIRST ELECTRONIC DEVICE
702
CN
FIRST NONLINEAR CAPACITANCE COMPENSATION CIRCUIT
706
CC
704
CAPACITANCE COMPENSATION CONTROL CIRCUIT
708
SS1
SC1
SR1
SN1
SIN
FIRST REPLICA CIRCUIT 712
FIRST SENSOR 710

FIG. 51

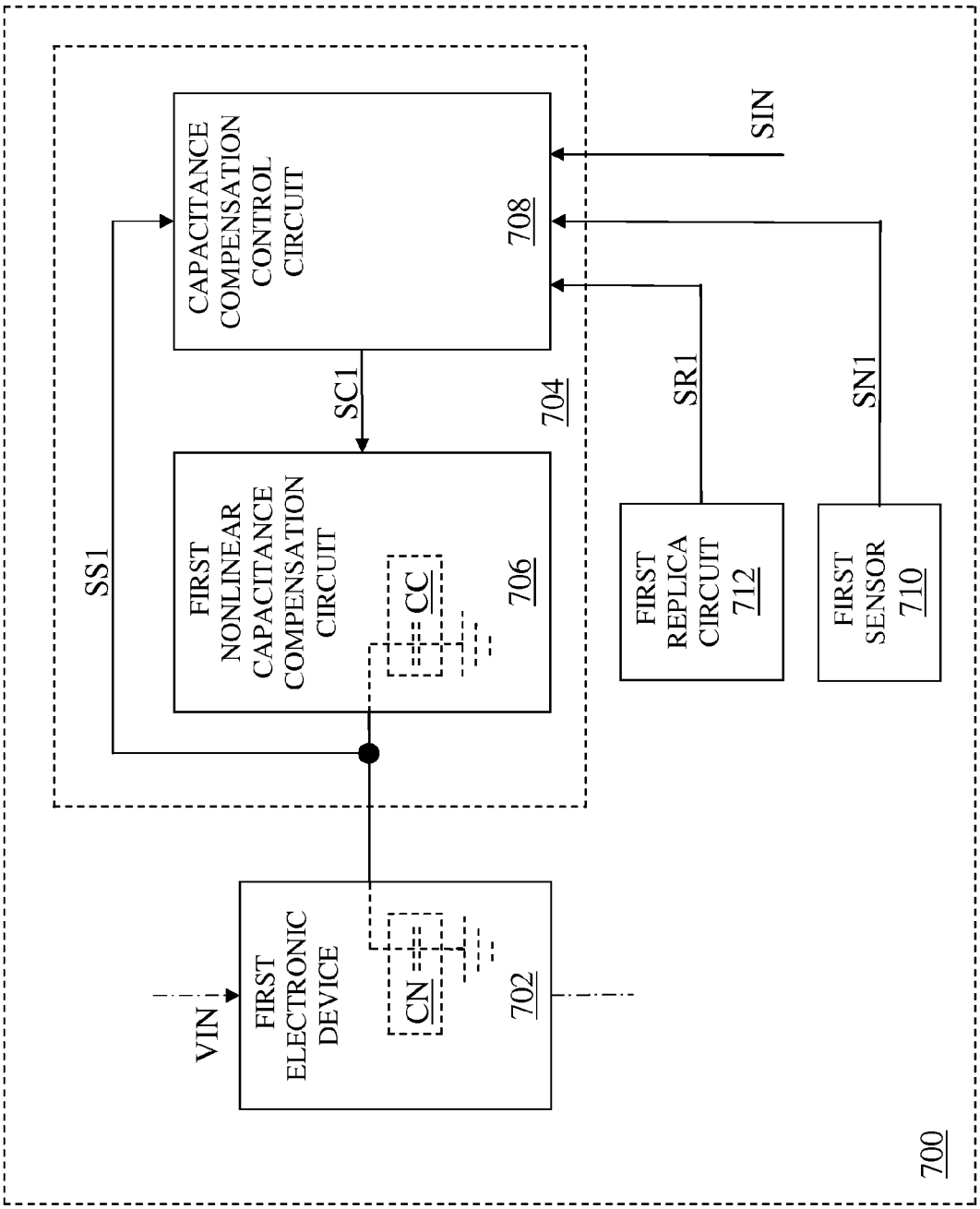
700
VIN
FIRST ELECTRONIC DEVICE
CN
702
704
SS1
FIRST NONLINEAR CAPACITANCE COMPENSATION CIRCUIT
CC
706
SC1
CAPACITANCE COMPENSATION CONTROL CIRCUIT
708
SIN
SR1
SN1
FIRST REPLICA CIRCUIT 712
FIRST SENSOR 710

FIG. 52

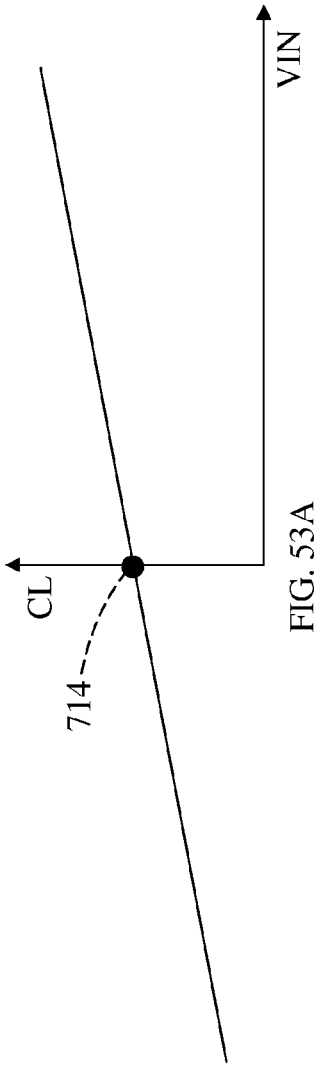

FIG. 53A

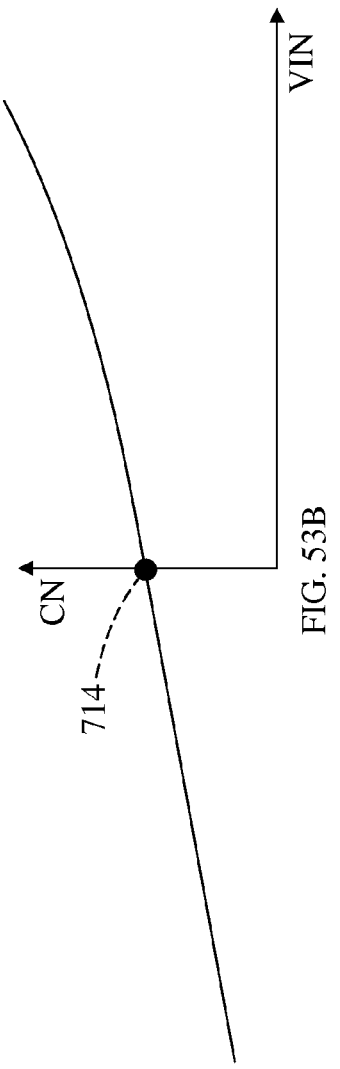

FIG. 53B

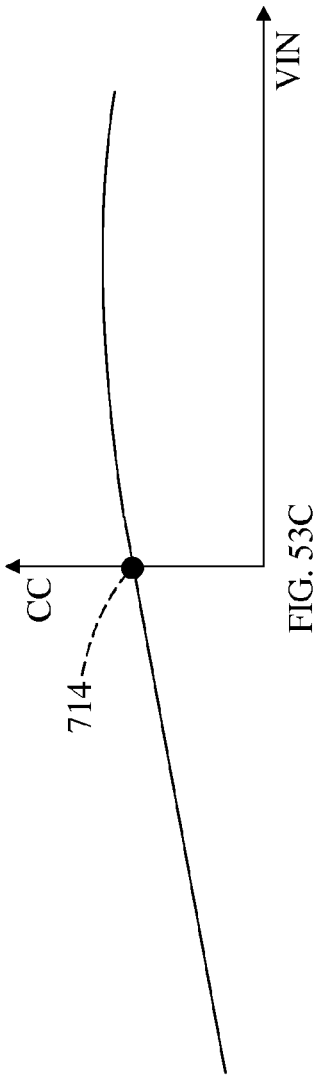

FIG. 53C

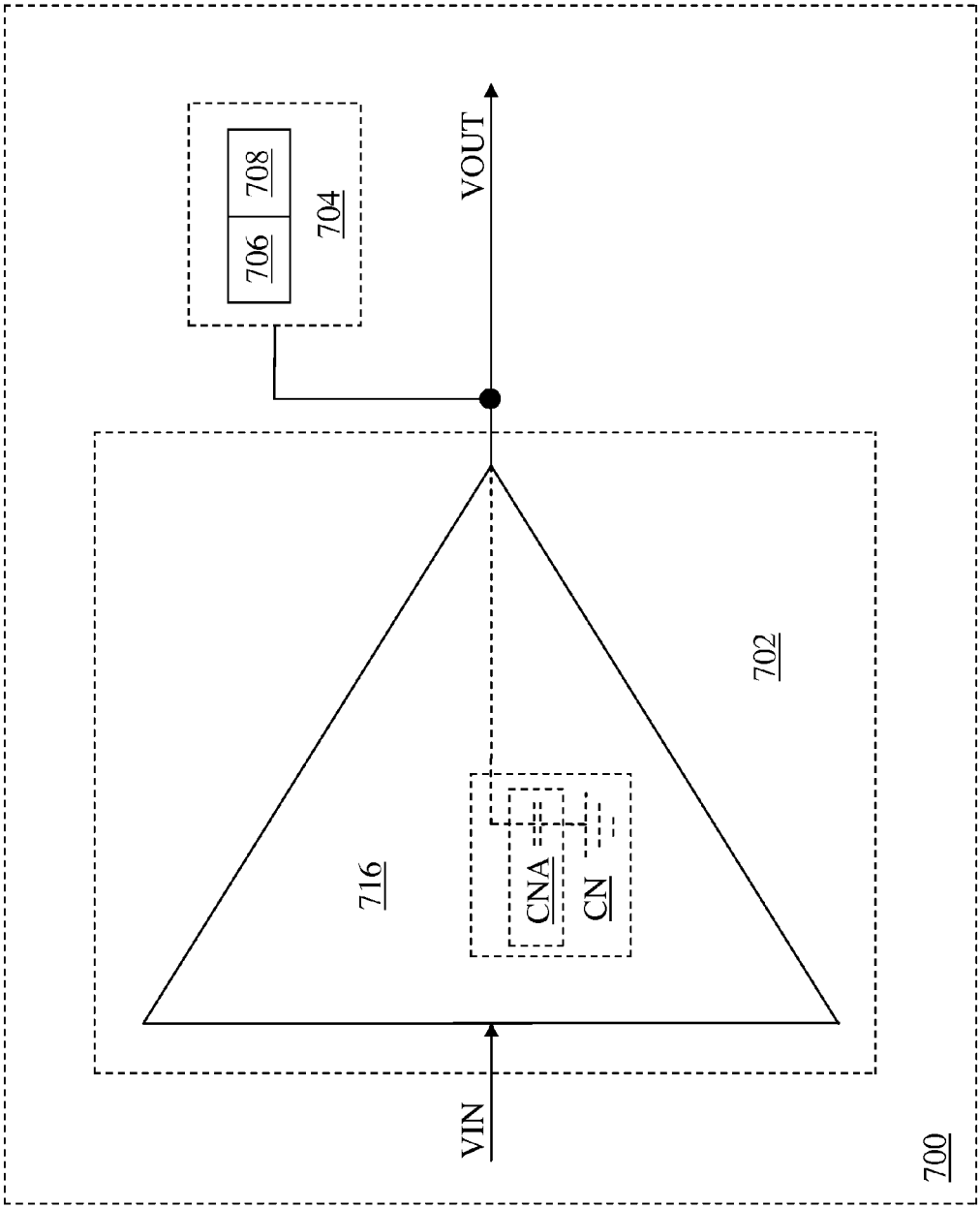

FIG. 54

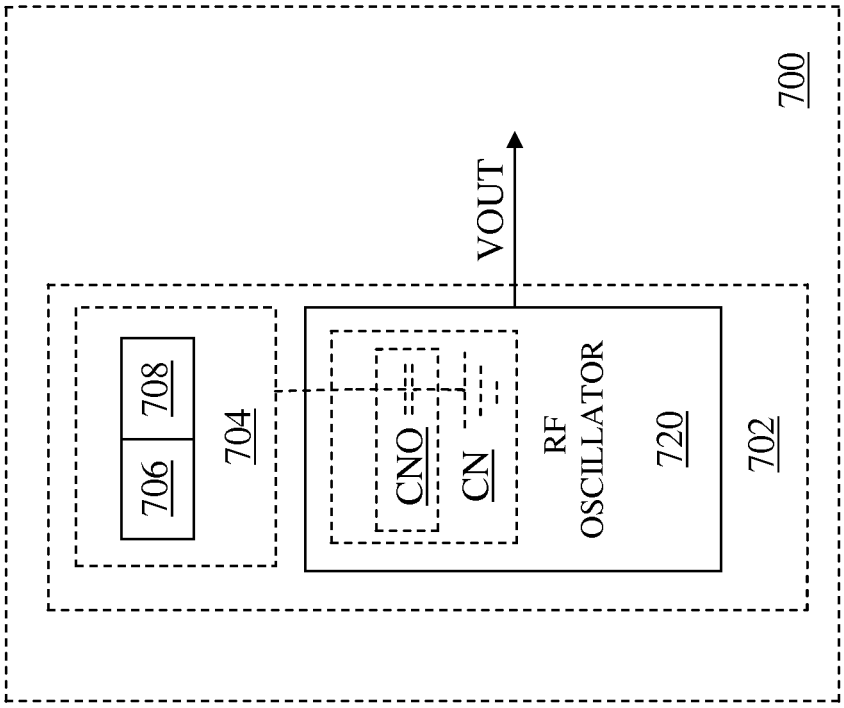

FIG. 55B

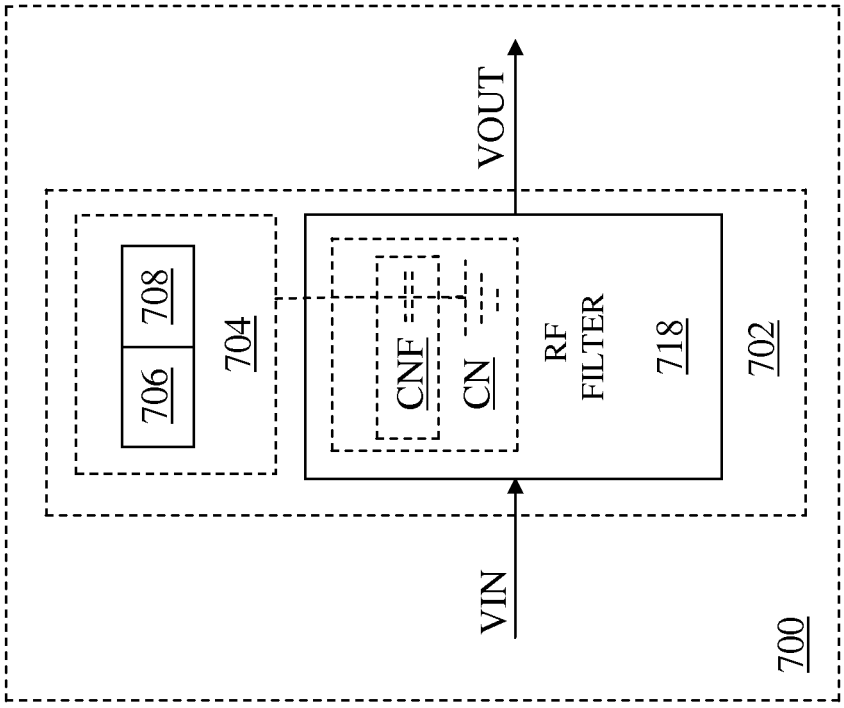

FIG. 55A

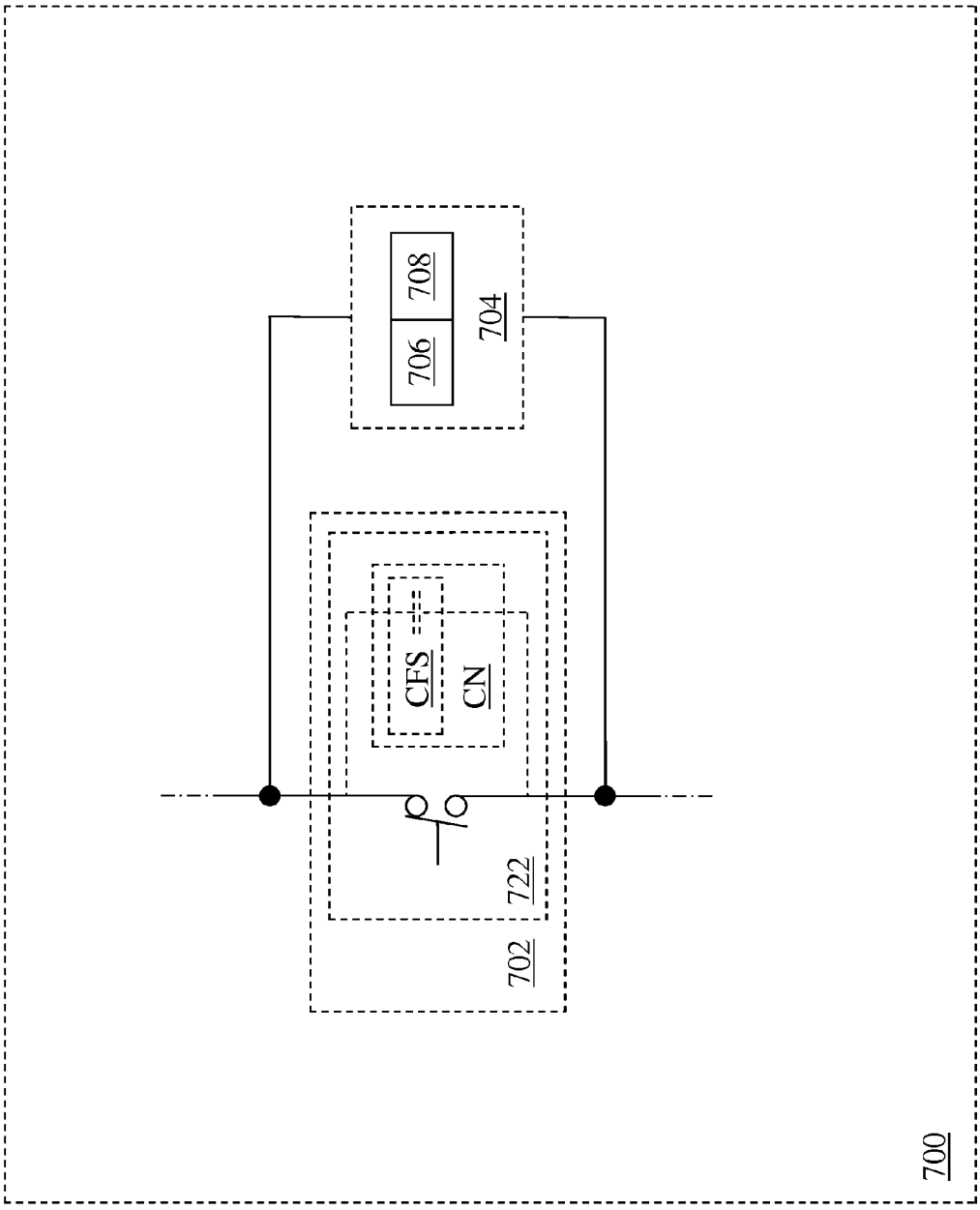

FIG. 56

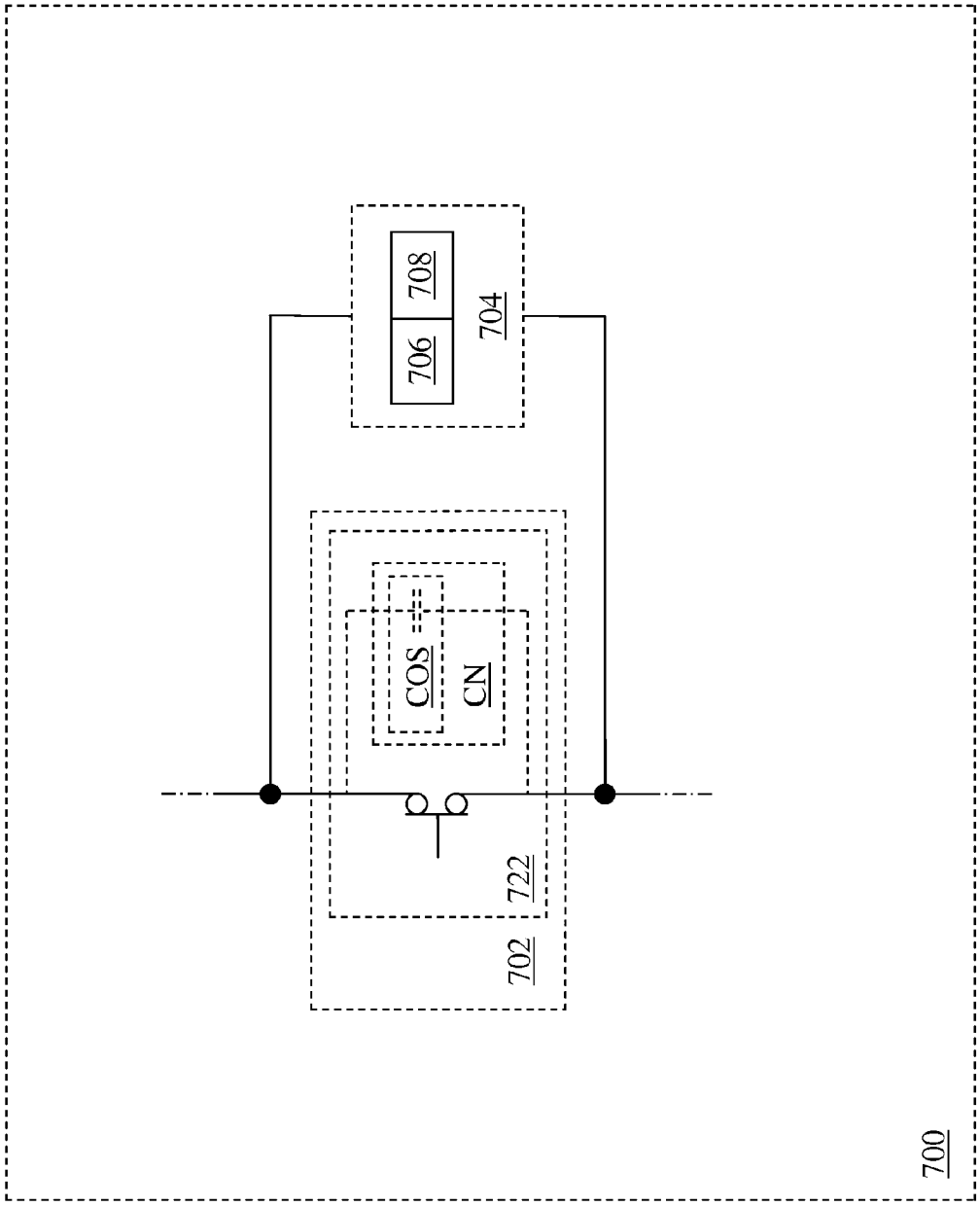

FIG. 57

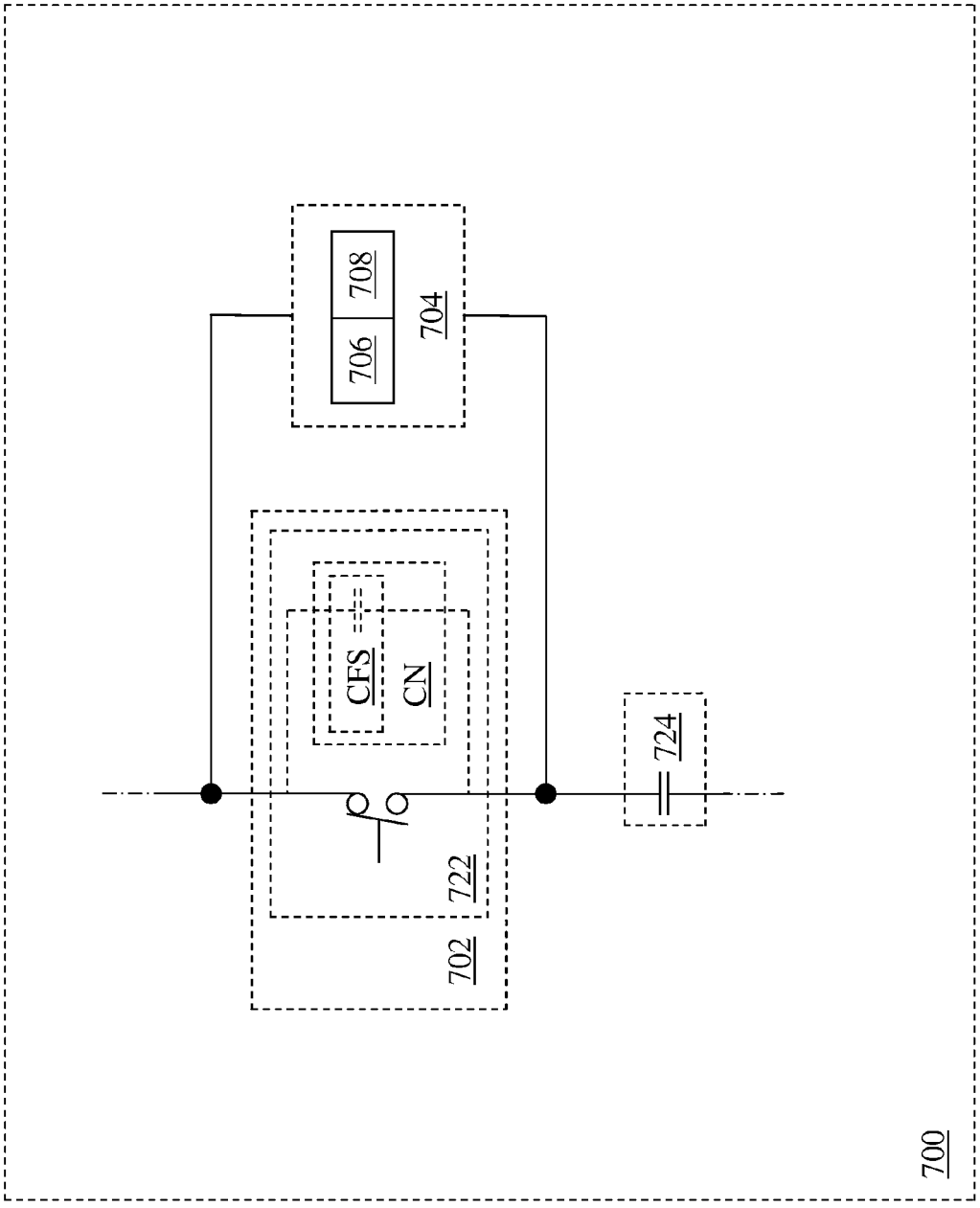

FIG. 58

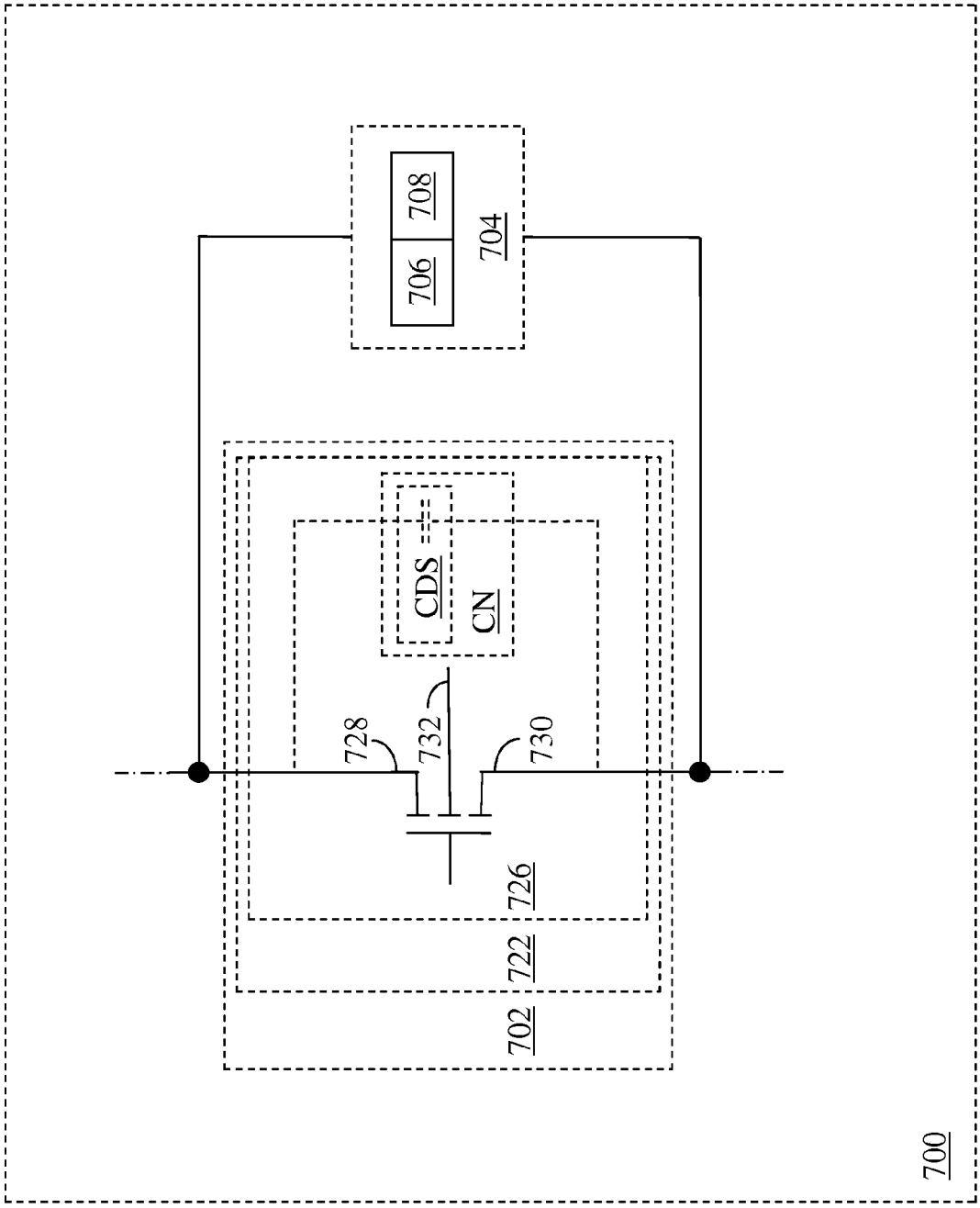

FIG. 59

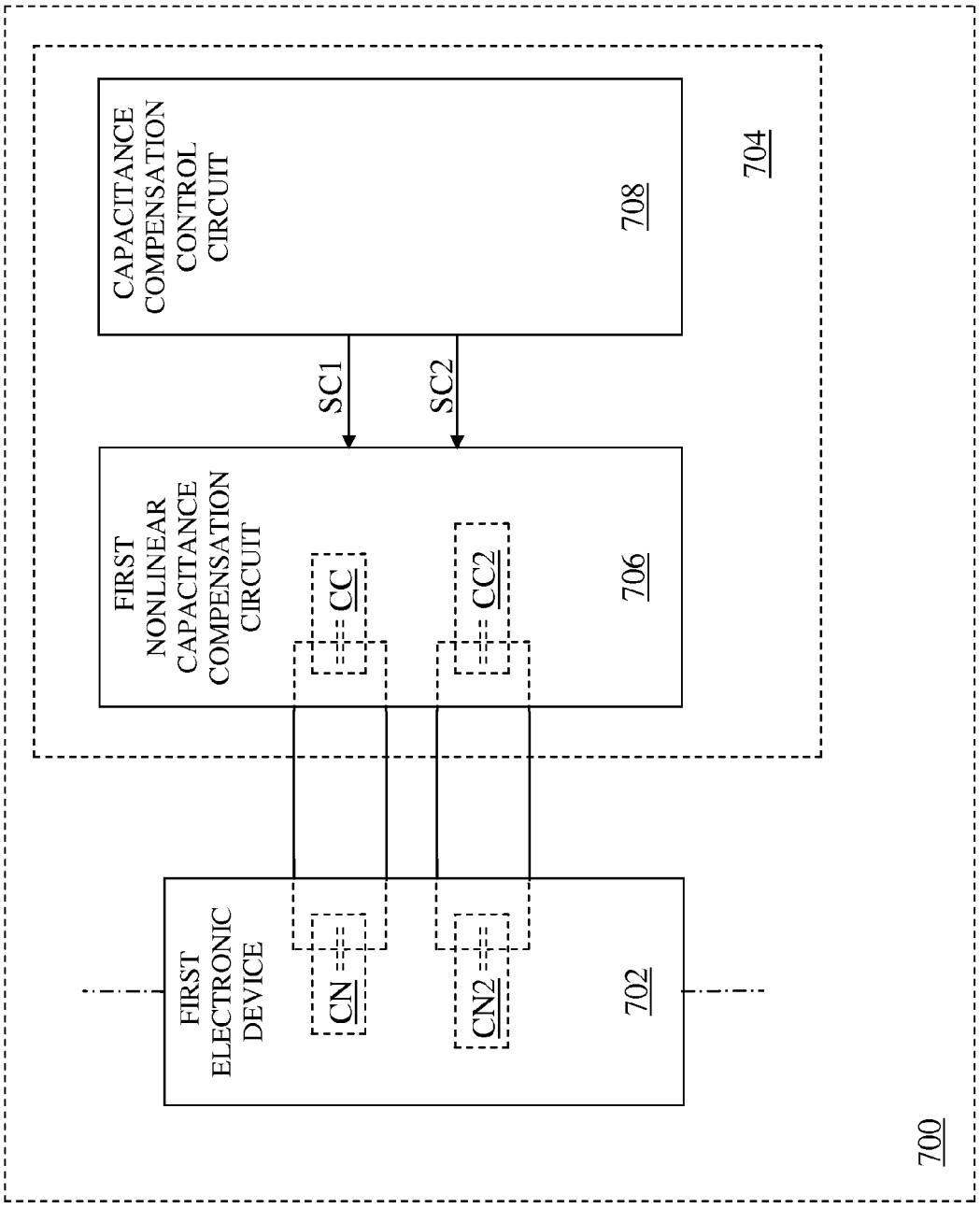
CAPACITANCE COMPENSATION CONTROL CIRCUIT
708
704
SC1
SC2
FIRST NONLINEAR CAPACITANCE COMPENSATION CIRCUIT
CC
CC2
706
FIRST ELECTRONIC DEVICE
CN
CN2
702
700

FIG. 60

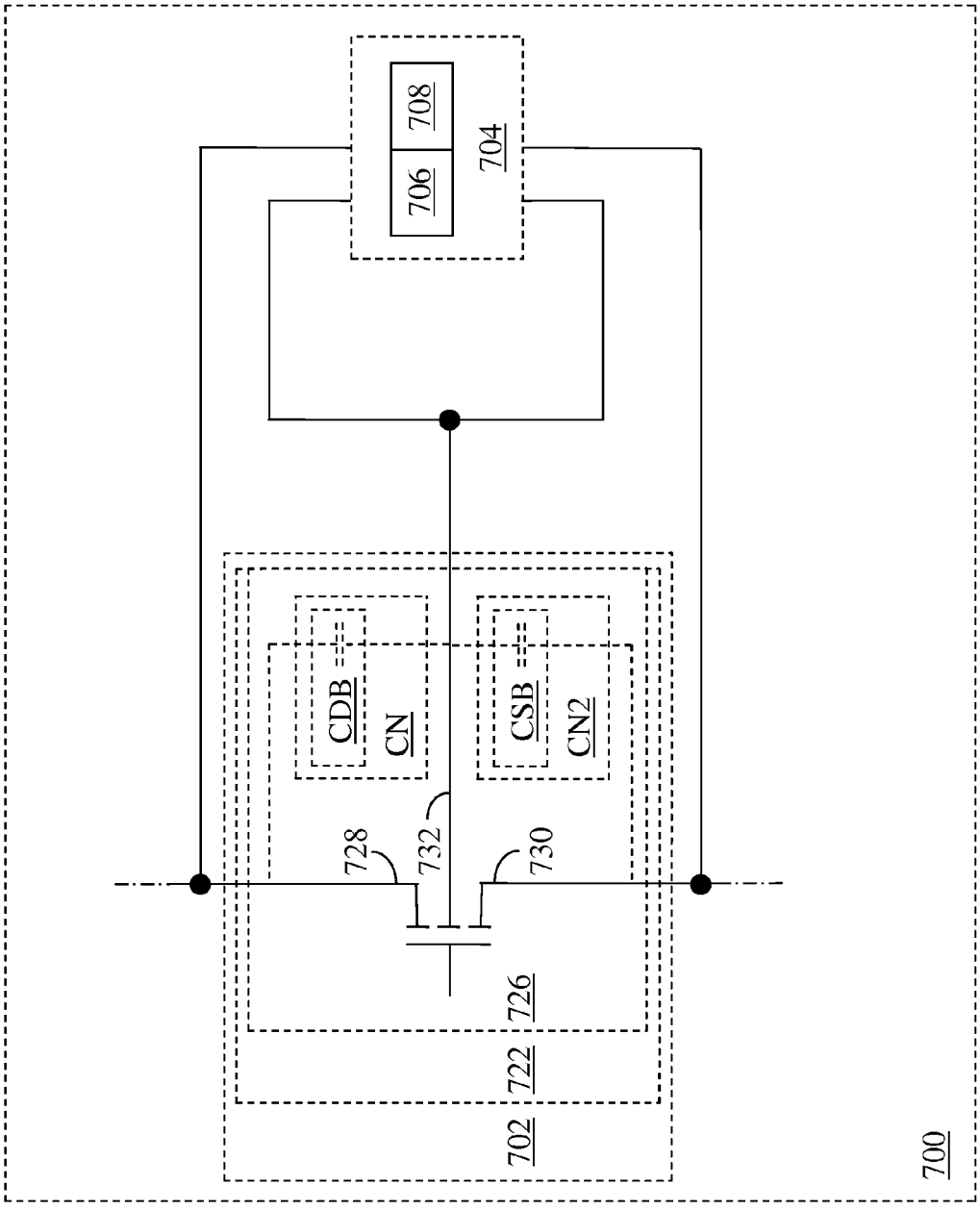

FIG. 61

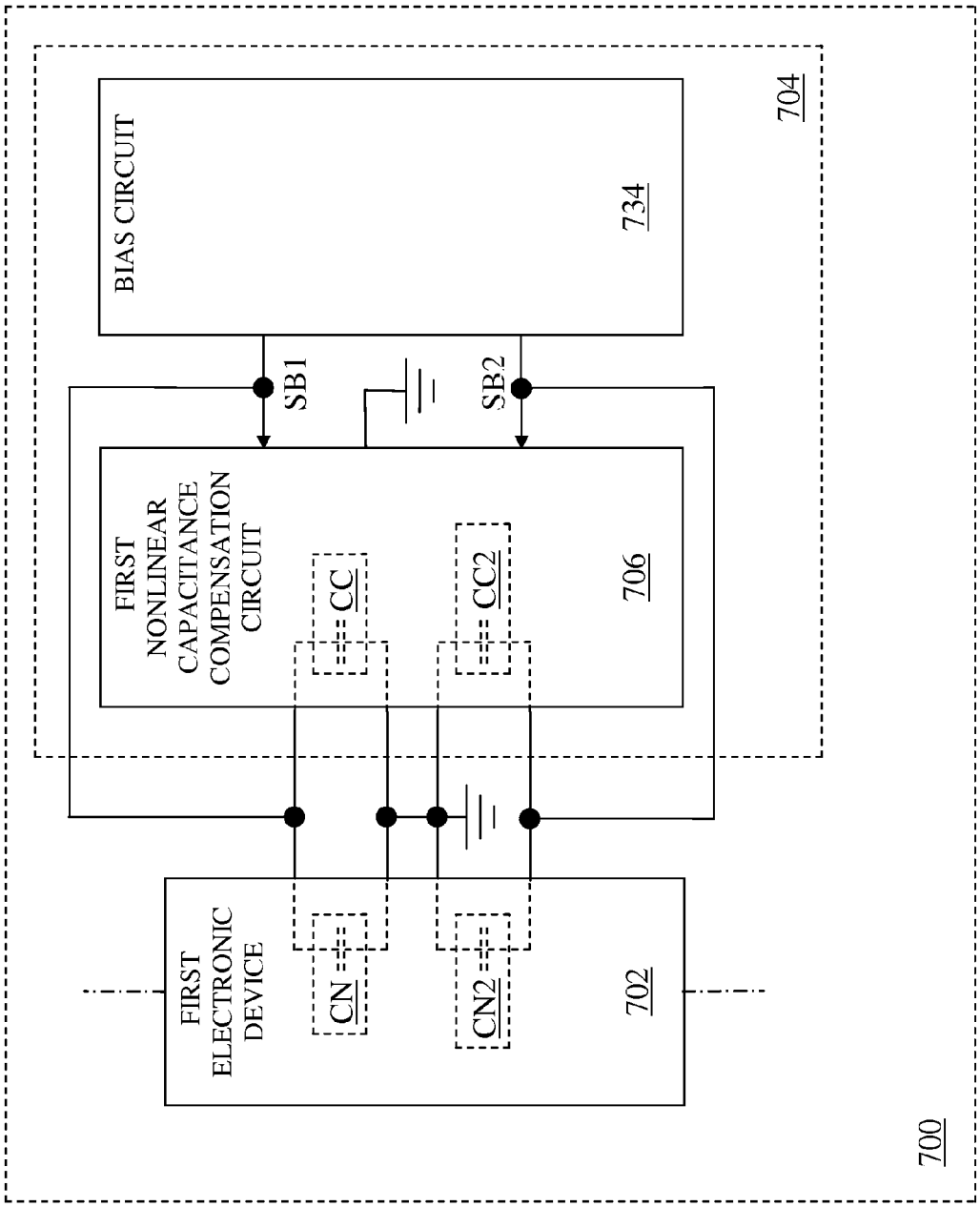
700
704
BIAS CIRCUIT
734
SB1
SB2
FIRST NONLINEAR CAPACITANCE COMPENSATION CIRCUIT
706
CC
CC2
FIRST ELECTRONIC DEVICE
702
CN
CN2

FIG. 62

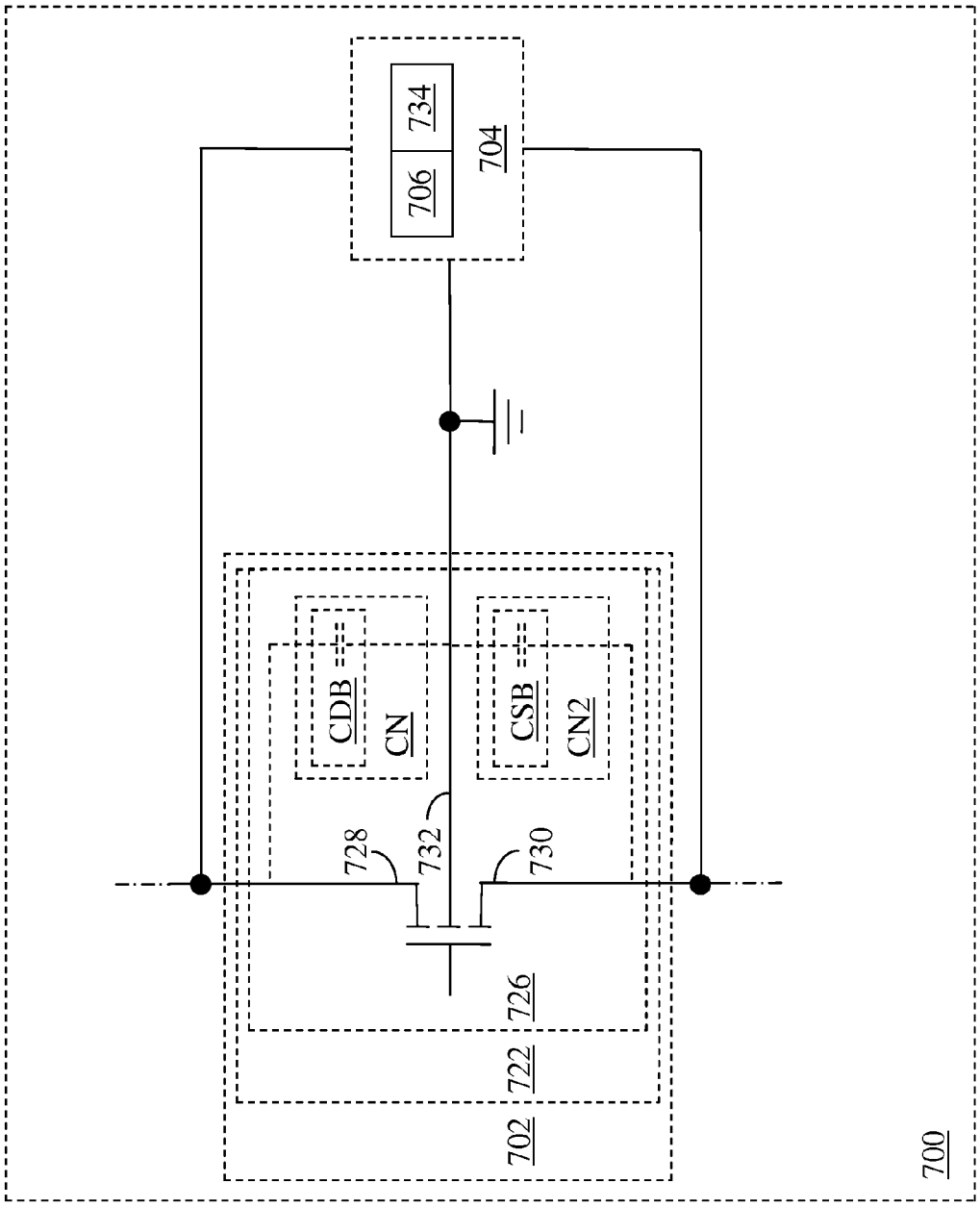

FIG. 63

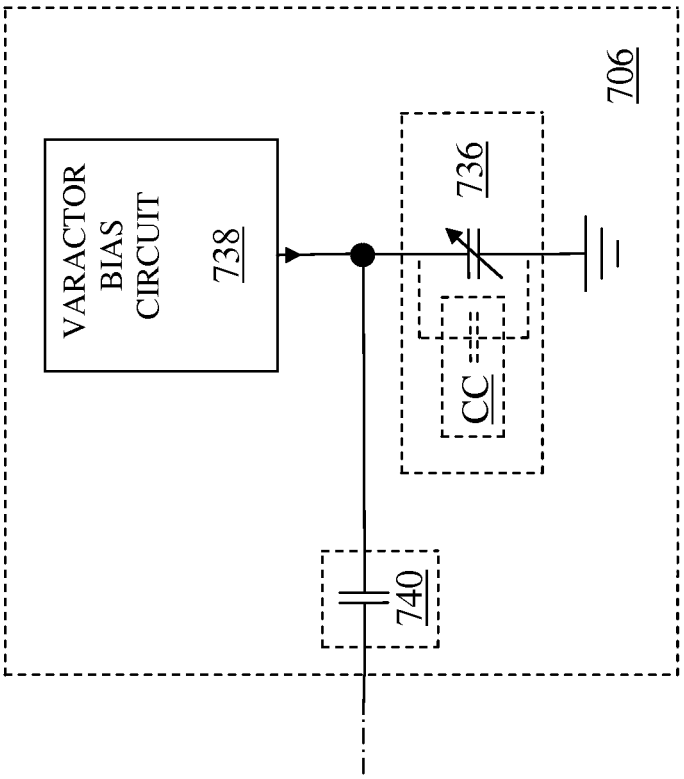

FIG. 64

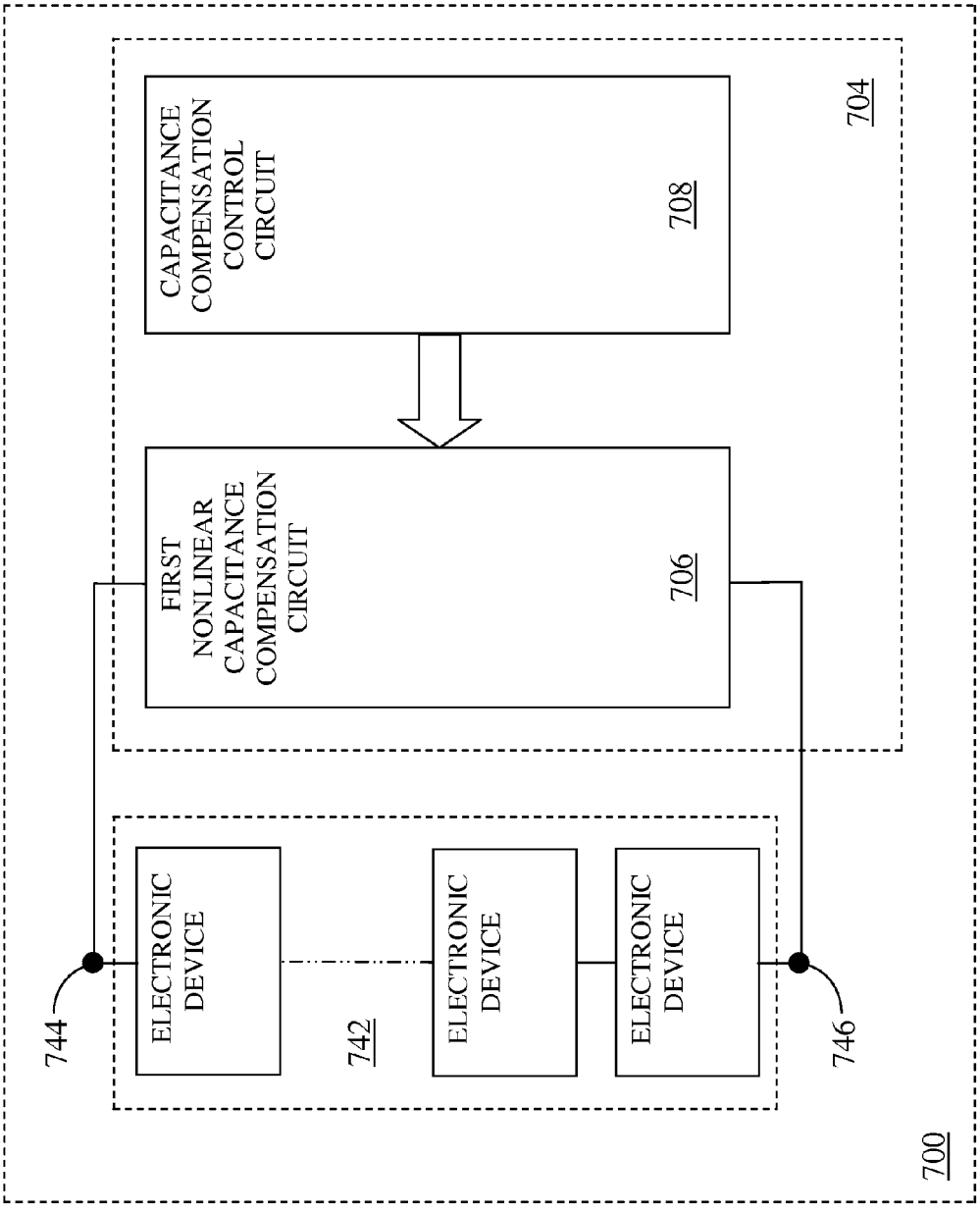
700
704
CAPACITANCE COMPENSATION CONTROL CIRCUIT
708
FIRST NONLINEAR CAPACITANCE COMPENSATION CIRCUIT
706
ELECTRONIC DEVICE
ELECTRONIC DEVICE
ELECTRONIC DEVICE
742
744
746

FIG. 65

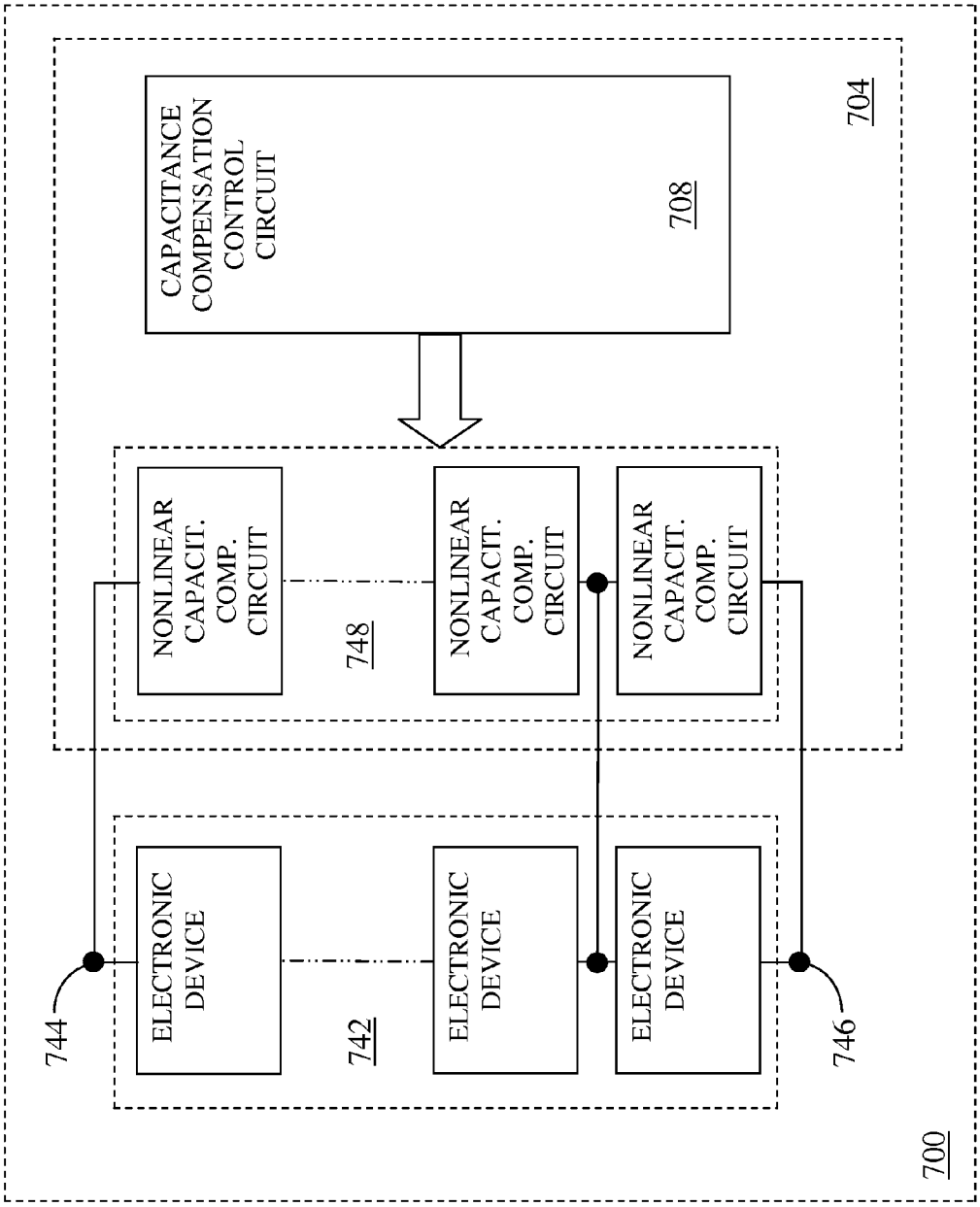
CAPACITANCE COMPENSATION CONTROL CIRCUIT
708
704
NONLINEAR CAPACIT. COMP. CIRCUIT
748
NONLINEAR CAPACIT. COMP. CIRCUIT
NONLINEAR CAPACIT. COMP. CIRCUIT
ELECTRONIC DEVICE
742
ELECTRONIC DEVICE
ELECTRONIC DEVICE
744
746
700

FIG. 66

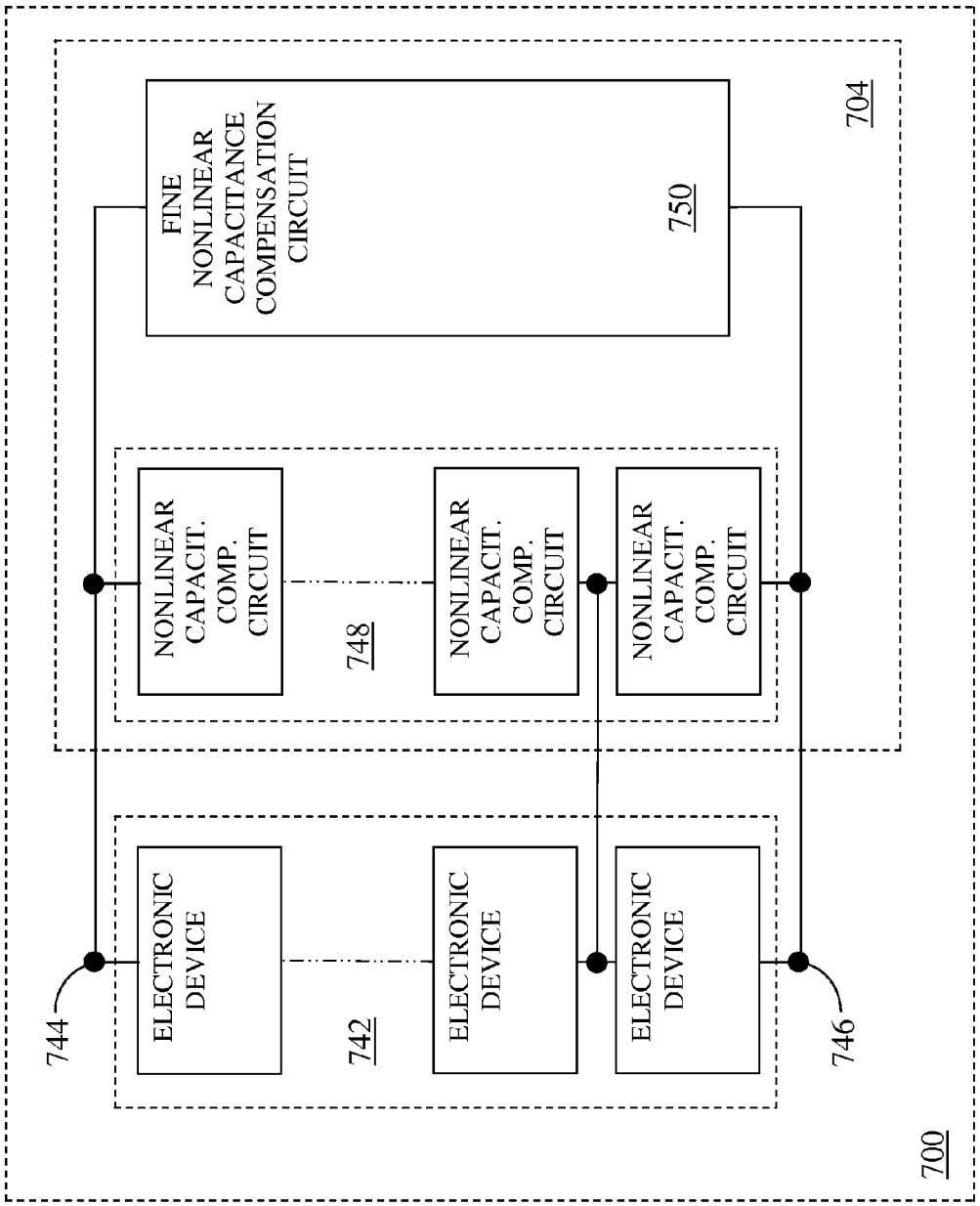
700
704
FINE NONLINEAR CAPACITANCE COMPENSATION CIRCUIT
750
NONLINEAR CAPACIT. COMP. CIRCUIT
748
NONLINEAR CAPACIT. COMP. CIRCUIT
NONLINEAR CAPACIT. COMP. CIRCUIT
ELECTRONIC DEVICE
742
ELECTRONIC DEVICE
ELECTRONIC DEVICE
744
746

FIG. 67

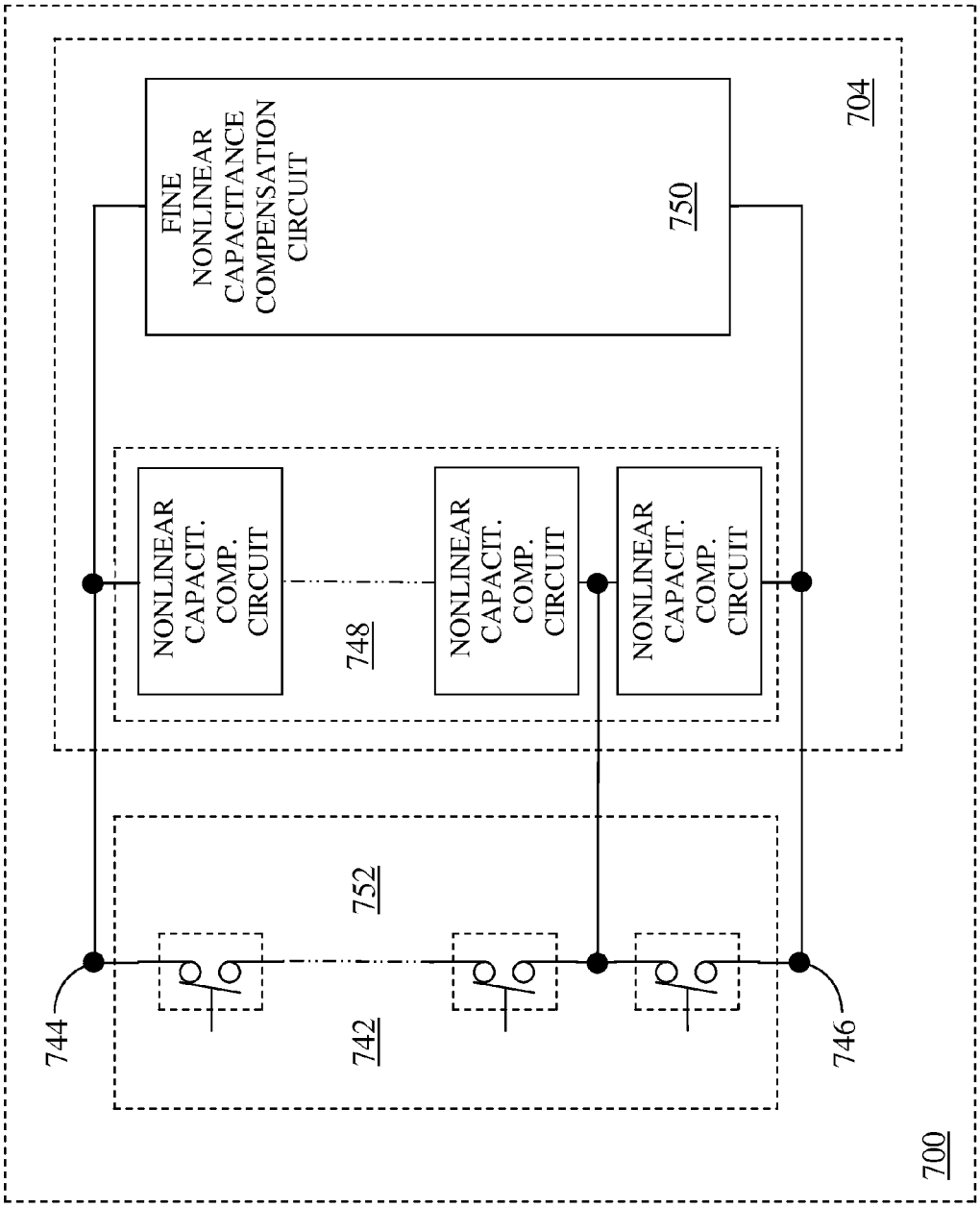
700
704
FINE NONLINEAR CAPACITANCE COMPENSATION CIRCUIT
750
NONLINEAR CAPACIT. COMP. CIRCUIT
748
NONLINEAR CAPACIT. COMP. CIRCUIT
NONLINEAR CAPACIT. COMP. CIRCUIT
752
742
744
746

FIG. 68

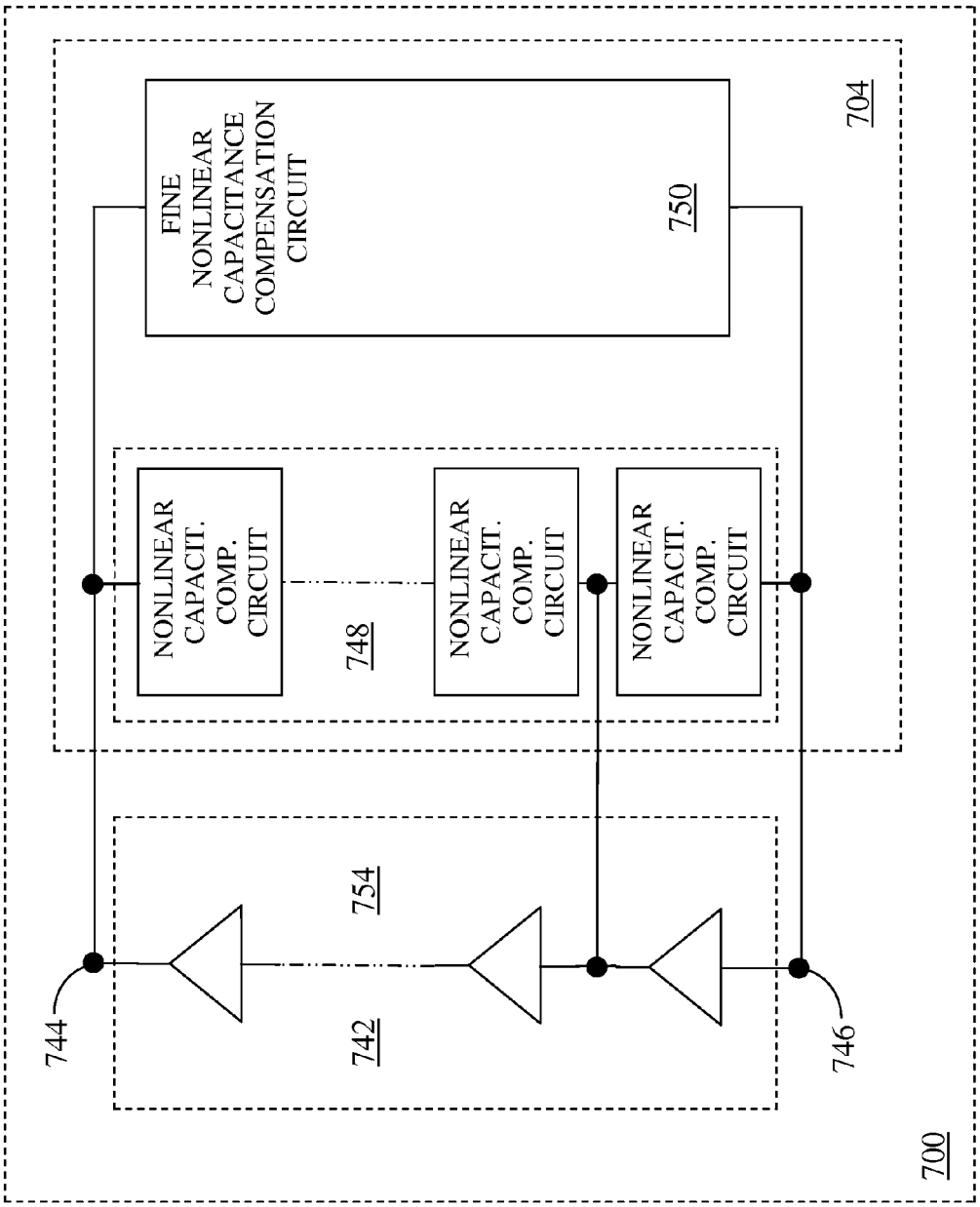
700
704
FINE NONLINEAR CAPACITANCE COMPENSATION CIRCUIT
750
NONLINEAR CAPACIT. COMP. CIRCUIT
748
NONLINEAR CAPACIT. COMP. CIRCUIT
NONLINEAR CAPACIT. COMP. CIRCUIT
754
742
744
746

FIG. 69

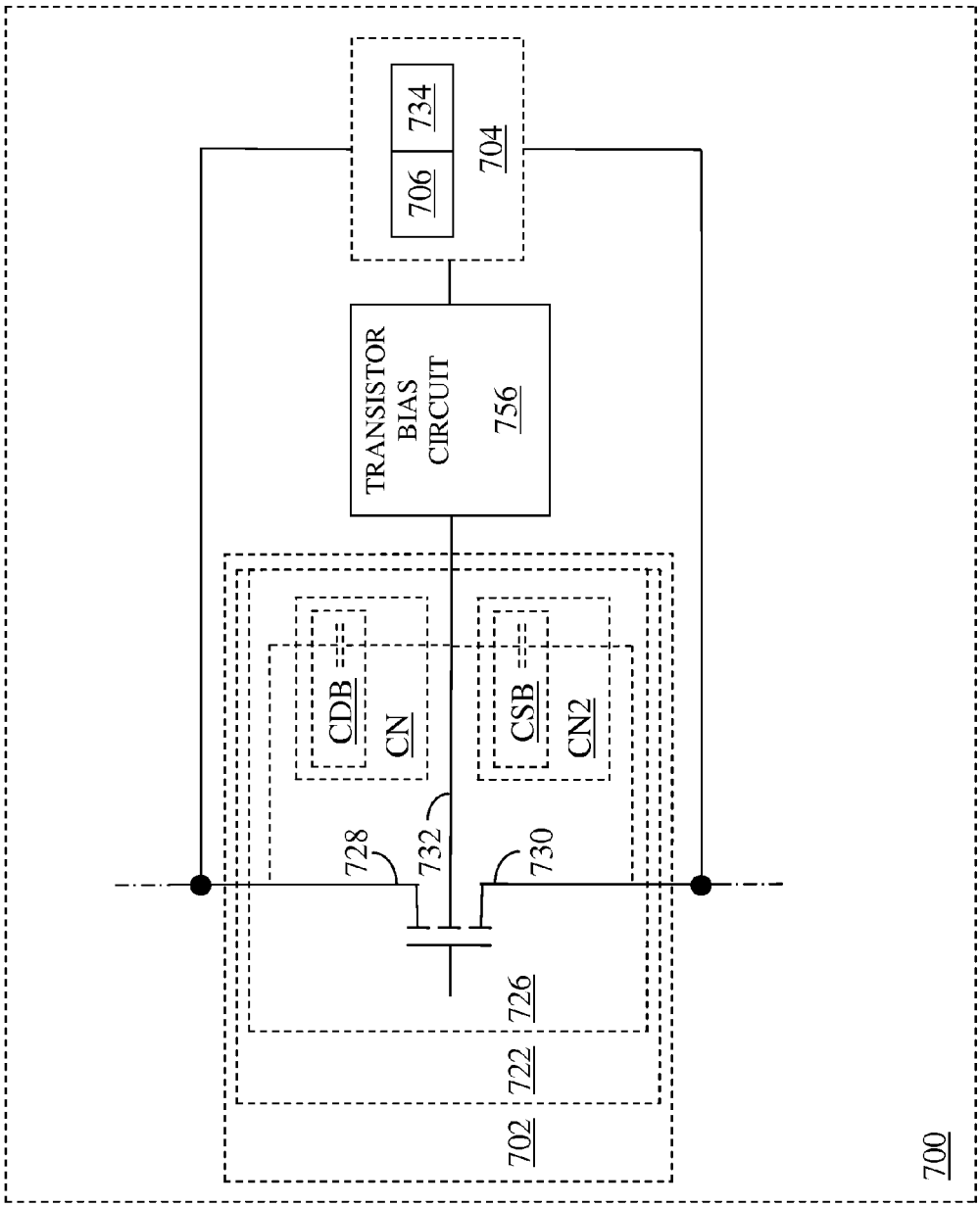
734
706
704
TRANSISTOR BIAS CIRCUIT
756
CDB
CN
CSB
CN2
728
732
730
726
722
702
700

FIG. 70

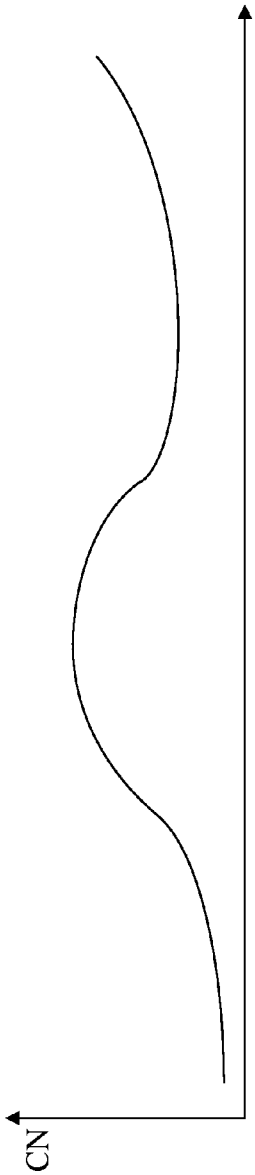

FIG. 71A

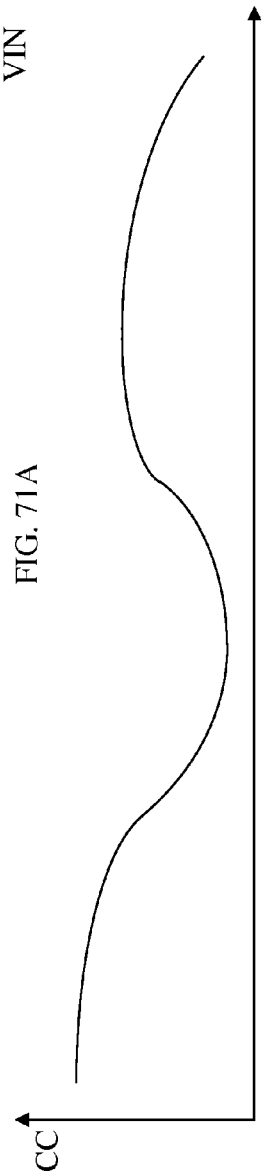

FIG. 71B

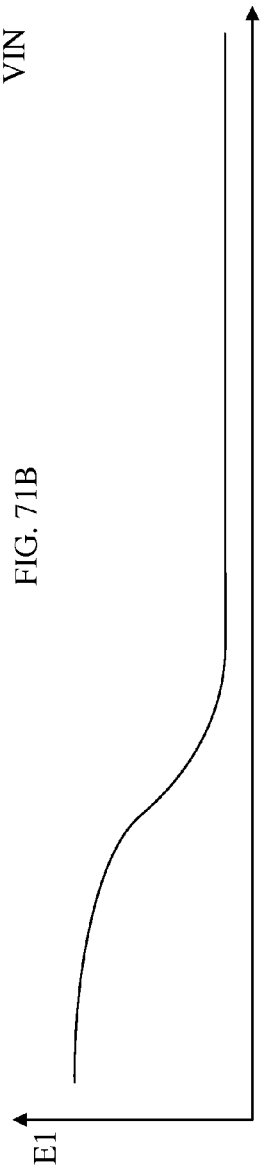

FIG. 71C

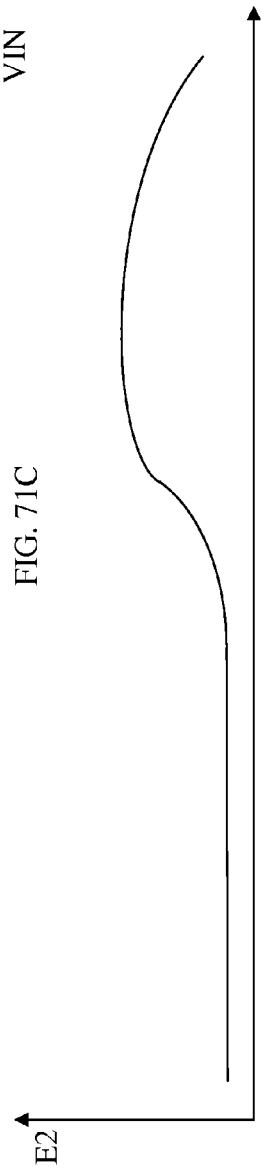

FIG. 71D

NONLINEAR CAPACITANCE LINEARIZATION

RELATED APPLICATIONS

The present application claims priority to U.S. Provisional Patent Application No. 61/831,666, filed Jun. 6, 2013; U.S. Provisional Patent Application No. 61/860,932, filed Aug. 1, 2013; U.S. Provisional Patent Application No. 61/909,028, filed Nov. 26, 2013; U.S. Provisional Patent Application No. 61/938,884, filed Feb. 12, 2014; U.S. Provisional Patent Application No. 61/949,581, filed Mar. 7, 2014; U.S. Provisional Patent Application No. 61/951,844, filed Mar. 12, 2014; U.S. Provisional Patent Application No. 61/982,946, filed Apr. 23, 2014; U.S. Provisional Patent Application No. 61/982,952, filed Apr. 23, 2014; U.S. Provisional Patent Application No. 61/982,971, filed Apr. 23, 2014; and U.S. Provisional Patent Application No. 62/008,192, filed Jun. 5, 2014.

The present application is related to concurrently filed U.S. patent application Ser. No. 14/298,829, entitled "TUNABLE RF FILTER STRUCTURE FORMED BY A MATRIX OF WEAKLY COUPLED RESONATORS;" concurrently filed U.S. patent application Ser. No. 14/298,830, entitled "TUNABLE RF FILTER PATHS FOR TUNABLE RF FILTER STRUCTURES," now U.S. Pat. No. 9,419,578; concurrently filed U.S. patent application Ser. No. 14/298,834, entitled "HIGH QUALITY FACTOR INTERCONNECT FOR RF CIRCUITS;" concurrently filed U.S. patent application Ser. No. 14/298,863, entitled "TUNABLE RF FILTER BASED RF COMMUNICATIONS SYSTEM;" and concurrently filed U.S. patent application Ser. No. 14/298,852, entitled "MULTI-BAND INTERFERENCE OPTIMIZATION."

All of the applications listed above are hereby incorporated herein by reference in their entireties.

FIELD OF THE DISCLOSURE

Embodiments of the present disclosure relate to radio frequency (RF) communications systems, which may include RF front-end circuitry, RF transceiver circuitry, RF amplifiers, direct current (DC)-DC converters, RF filters, RF antennas, RF switches, RF combiners, RF splitters, the like, or any combination thereof.

BACKGROUND

As wireless communications technologies evolve, wireless communications systems become increasingly sophisticated. As such, wireless communications protocols continue to expand and change to take advantage of the technological evolution. As a result, to maximize flexibility, many wireless communications devices must be capable of supporting any number of wireless communications protocols, each of which may have certain performance requirements, such as specific out-of-band emissions requirements, linearity requirements, or the like. Further, portable wireless communications devices are typically battery powered and need to be relatively small, and have low cost. As such, to minimize size, cost, and power consumption, RF circuitry in such a device needs to be as simple, small, flexible, and efficient as is practical. Thus, there is a need for RF circuitry in a communications device that is low cost, small, simple, flexible, and efficient.

SUMMARY

An apparatus, which includes a first electronic device, a first nonlinear capacitance compensation circuit, and a capacitance compensation control circuit, is disclosed according to one embodiment of the present disclosure. The first electronic device has a first nonlinear capacitance and is coupled to the first nonlinear capacitance compensation circuit, which has a first compensation capacitance and receives a first compensation control signal. The capacitance compensation control circuit adjusts the first compensation capacitance using the first compensation control signal to at least partially linearize the first nonlinear capacitance.

Those skilled in the art will appreciate the scope of the disclosure and realize additional aspects thereof after reading the following detailed description in association with the accompanying drawings.

BRIEF DESCRIPTION OF THE DRAWINGS

The accompanying drawings incorporated in and forming a part of this specification illustrate several aspects of the disclosure, and together with the description serve to explain the principles of the disclosure.

FIG. **1** shows traditional communications circuitry according to the prior art.

FIG. **2** shows the traditional communications circuitry according to the prior art.

FIG. **3** shows the traditional communications circuitry according to the prior art.

FIG. **4** shows RF communications circuitry according to one embodiment of the RF communications circuitry.

FIG. **5** is a graph illustrating filtering characteristics of a first tunable RF filter path and a second tunable RF filter path illustrated in FIG. **4** according to one embodiment of the first tunable RF filter path and the second tunable RF filter path.

FIGS. **6**A and **6**B are graphs illustrating filtering characteristics of the first tunable RF filter path and the second tunable RF filter path, respectively, illustrated in FIG. **4** according to an alternate embodiment of the first tunable RF filter path and the second tunable RF filter path, respectively.

FIG. **7** shows the RF communications circuitry according to one embodiment of the RF communications circuitry.

FIG. **8** shows the RF communications circuitry according to an alternate embodiment of the RF communications circuitry.

FIGS. **9**A and **9**B are graphs illustrating filtering characteristics of the first tunable RF filter path and the second tunable RF filter path, respectively, illustrated in FIG. **8** according to an additional embodiment of the first tunable RF filter path and the second tunable RF filter path.

FIGS. **10**A and **10**B are graphs illustrating filtering characteristics of a first traditional RF duplexer and a second traditional RF duplexer, respectively, illustrated in FIG. **3** according to the prior art.

FIG. **11** shows the RF communications circuitry according to one embodiment of the RF communications circuitry.

FIG. **12** shows the RF communications circuitry according to an alternate embodiment of the RF communications circuitry.

FIG. **13** shows the RF communications circuitry according to an additional embodiment of the RF communications circuitry.

FIG. **14** shows the RF communications circuitry according to another embodiment of the RF communications circuitry.

FIG. **15** shows the RF communications circuitry according to a further embodiment of the RF communications circuitry.

FIG. **16** shows the RF communications circuitry according to one embodiment of the RF communications circuitry.

FIG. **17** shows the RF communications circuitry according to an alternate embodiment of the RF communications circuitry.

FIG. **18** shows the RF communications circuitry according to an additional embodiment of the RF communications circuitry.

FIG. **19** shows the RF communications circuitry according to another embodiment of the RF communications circuitry.

FIG. **20** shows the RF communications circuitry according to a further embodiment of the RF communications circuitry.

FIG. **21** illustrates one embodiment of a tunable radio frequency (RF) filter structure that defines multiple tunable RF filtering paths that are independent of each other.

FIG. **22** illustrates one embodiment of a tunable RF filter path shown in FIG. **21** having cross-coupling capacitors arranged in a V-bridge structure.

FIG. **23** illustrates another embodiment of the tunable RF filter path shown in FIG. **21** having cross-coupling capacitors arranged in an X-bridge structure.

FIG. **24** illustrates another embodiment of the tunable RF filter path shown in FIG. **21** having a cross-coupling capacitor arranged in a single positive bridge structure.

FIG. **25** illustrates another embodiment of the tunable RF filter path shown in FIG. **21** having cross-coupling capacitors arranged in an H-bridge structure.

FIG. **26** illustrates another embodiment of the tunable RF filter path shown in FIG. **21** having cross-coupling capacitors arranged in a double H-bridge structure.

FIG. **27** illustrates another embodiment of the tunable RF filter path shown in FIG. **21** having four weakly coupled resonators with magnetic and electric couplings between them.

FIGS. **28**A-**28**D disclose different embodiments of a tunable RF filter structure, each with a different number of input terminals and output terminals.

FIG. **29** illustrates one embodiment of a tunable radio frequency (RF) filter structure having four resonators and cross-coupling capacitive structures electrically connected between the four resonators so as to form a 2×2 matrix with the four resonators. In alternative embodiments, fewer (e.g., three) resonators or more (e.g., five or more) resonators may be provided.

FIG. **30** illustrates another embodiment of a tunable RF filter structure having M number of rows and N number of columns of resonators that are electrically connected by cross-coupling capacitive structures so that the tunable RF filter structure is arranged so as to form an M×N two-dimensional matrix of the resonators.

FIG. **31** illustrates the tunable RF filter structure shown in FIG. **30** electrically connected to various RF antennas.

FIG. **32** illustrates the tunable RF filter structure shown in FIG. **30** with two tunable RF filter paths highlighted for performing Multiple Input Multiple Output (MIMO), Single Input Multiple Output (SIMO), Multiple Input Single Output (MISO), and Single Input Single Output (SISO) operations.

FIG. **33** illustrates another embodiment of a tunable RF filter structure with amplifier stages electrically connected within and between tunable RF filter paths.

FIG. **34** illustrates an embodiment of a tunable RF filter structure integrated into an integrated circuit (IC) package with multiple and separate semiconductor dies.

FIG. **35** illustrates an embodiment of the same tunable RF filter structure shown in FIG. **34**, but now integrated into an IC package with a single semiconductor die.

FIG. **36** illustrates one embodiment of a tunable RF filter structure having resonators and cross-coupling capacitive structures electrically connected between the resonators so as to form a three-dimensional matrix of the resonators.

FIG. **37** shows the RF communications circuitry according to one embodiment of the RF communications circuitry.

FIG. **38** shows the RF communications circuitry according to an alternate embodiment of the RF communications circuitry.

FIG. **39** shows the RF communications circuitry according to an additional embodiment of the RF communications circuitry.

FIG. **40**A is a graph illustrating a profile of an RF communications band of interest according to one embodiment of the RF communications band.

FIG. **40**B is a graph illustrating a first bandpass filter response of the first tunable RF receive filter shown in FIG. **38** according to one embodiment of the first tunable RF receive filter.

FIG. **41**A is a graph illustrating the first bandpass filter response and a second bandpass filter response of the first tunable RF receive filter shown in FIG. **38** according to one embodiment of the first tunable RF receive filter.

FIG. **41**B is a graph illustrating the first bandpass filter response and a third bandpass filter response of the first tunable RF receive filter shown in FIG. **38** according to one embodiment of the first tunable RF receive filter.

FIG. **42** shows the RF communications circuitry according to one embodiment of the RF communications circuitry.

FIG. **43** shows the RF communications circuitry according to an alternate embodiment of the RF communications circuitry.

FIG. **44** shows the RF communications circuitry according to an additional embodiment of the RF communications circuitry.

FIG. **45** shows the RF communications circuitry according to another embodiment of the RF communications circuitry.

FIG. **46** shows the first RF filter structure shown in FIG. **45** according to one embodiment of the first RF filter structure.

FIG. **47** shows the first RF filter structure shown in FIG. **45** according to an alternate embodiment of the first RF filter structure.

FIG. **48** shows the first RF filter structure shown in FIG. **45** according to an additional embodiment of the first RF filter structure.

FIG. **49** shows the first RF filter structure shown in FIG. **45** according to another embodiment of the first RF filter structure.

FIG. **50** shows one embodiment of the RF communications circuitry and alternate RF communications circuitry.

FIG. **51** shows an electronics apparatus according to one embodiment of the electronics apparatus.

FIG. **52** shows the electronics apparatus according to an alternate embodiment of the electronics apparatus.

FIGS. **53**A, **53**B, and **53**C are graphs illustrating relationships between an input signal and a linear capacitance, the input signal and a first nonlinear capacitance, and the input signal and a first compensation capacitance, respectively.

FIG. **54** shows the electronics apparatus according to one embodiment of the electronics apparatus.

FIG. **55**A shows the electronics apparatus according to an alternate embodiment of the electronics apparatus.

FIG. **55**B shows the electronics apparatus according to an additional embodiment of the electronics apparatus.

FIG. **56** shows the electronics apparatus according to one embodiment of the electronics apparatus.

FIG. **57** shows the electronics apparatus according to an alternate embodiment of the electronics apparatus.

FIG. **58** shows the electronics apparatus according to an additional embodiment of the electronics apparatus.

FIG. **59** shows the electronics apparatus according to one embodiment of the electronics apparatus.

FIG. **60** shows the electronics apparatus according to an alternate embodiment of the electronics apparatus.

FIG. **61** shows the electronics apparatus according to an additional embodiment of the electronics apparatus.

FIG. **62** shows the electronics apparatus according to another embodiment of the electronics apparatus.

FIG. **63** shows the electronics apparatus according to a further embodiment of the electronics apparatus.

FIG. **64** shows a first nonlinear capacitance compensation circuit illustrated in FIG. **52** according to one embodiment of the first nonlinear capacitance compensation circuit.

FIG. **65** shows the electronics apparatus according to one embodiment of the electronics apparatus.

FIG. **66** shows the electronics apparatus according to an alternate embodiment of the electronics apparatus.

FIG. **67** shows the electronics apparatus according to an additional embodiment of the electronics apparatus.

FIG. **68** shows the electronics apparatus according to another embodiment of the electronics apparatus.

FIG. **69** shows the electronics apparatus according to a further embodiment of the electronics apparatus.

FIG. **70** shows the electronics apparatus according to one embodiment of the electronics apparatus.

FIGS. **71**A, **71**B, **71**C, and **71**D are graphs illustrating linearity responses of a first nonlinear capacitance, a first compensation capacitance, a first elementary response of a first nonlinear capacitance compensation circuit, and a second elementary response of the first nonlinear capacitance compensation circuit, respectively, shown in FIG. **51**.

DETAILED DESCRIPTION

The embodiments set forth below represent the necessary information to enable those skilled in the art to practice the disclosure and illustrate the best mode of practicing the disclosure. Upon reading the following description in light of the accompanying drawings, those skilled in the art will understand the concepts of the disclosure and will recognize applications of these concepts not particularly addressed herein. It should be understood that these concepts and applications fall within the scope of the disclosure and the accompanying claims. RF communications circuitry, which includes a first RF filter structure, is disclosed according to a first embodiment of the present disclosure. The first RF filter structure includes a first tunable RF filter path and a second tunable RF filter path. The first tunable RF filter path includes a pair of weakly coupled resonators. Additionally, a first filter parameter of the first tunable RF filter path is tuned based on a first filter control signal. A first filter parameter of the second tunable RF filter path is tuned based on a second filter control signal.

In one embodiment of the first RF filter structure, the first tunable RF filter path is directly coupled between a first common connection node and a first connection node. The second tunable RF filter path is directly coupled between a second connection node and the first common connection node.

In one embodiment of the RF communications system, the first tunable RF filter path and the second tunable RF filter path do not significantly load one another at frequencies of interest. As such, by directly coupling the first tunable RF filter path and the second tunable RF filter path to the first common connection node; front-end RF switching elements may be avoided, thereby reducing cost, size, and nonlinearity; and increasing efficiency and flexibility of the RF communications system. In one embodiment of the RF communications system, the first common connection node is coupled to an antenna.

Embodiments of the RF communications system include frequency division duplex (FDD) applications, time division duplex (TDD) applications, carrier-aggregation (CA) applications, multiple antenna applications, MIMO applications, hybrid applications, applications supporting multiple communications bands, the like, or any combination thereof.

FIG. **1** shows traditional communications circuitry **10** according to the prior art. The traditional communications circuitry **10** illustrated in FIG. **1** is a time-division duplex (TDD) system, which is capable of transmitting and receiving RF signals, but not simultaneously. Such a system may also be called a half-duplex system. Additionally, the traditional communications circuitry **10** may be used as a simplex system, which is a system that only transmits RF signals or only receives RF signals. Traditional communications systems often use fixed frequency filters. As a result, to cover multiple communications bands, switching elements are needed to select between different signal paths.

The traditional communications circuitry **10** includes traditional RF system control circuitry **12**, traditional RF front-end circuitry **14**, and a first RF antenna **16**. The traditional RF front-end circuitry **14** includes traditional RF front-end control circuitry **18**, first traditional antenna matching circuitry **20**, first traditional RF receive circuitry **22**, first traditional RF transmit circuitry **24**, a first traditional RF switch **26**, and a second traditional RF switch **28**. The first traditional RF switch **26** is coupled between the first traditional antenna matching circuitry **20** and the first traditional RF receive circuitry **22**. The second traditional RF switch **28** is coupled between the first traditional antenna matching circuitry **20** and the first traditional RF transmit circuitry **24**. The first RF antenna **16** is coupled to the first traditional antenna matching circuitry **20**. The first traditional antenna matching circuitry **20** provides at least partial impedance matching between the first RF antenna **16** and either the first traditional RF receive circuitry **22** or the first traditional RF transmit circuitry **24**.

The traditional RF system control circuitry **12** provides the necessary control functions needed to facilitate RF communications between the traditional communications circuitry **10** and other RF devices. The traditional RF system control circuitry **12** processes baseband signals needed for the RF communications. As such, the traditional RF system control circuitry **12** provides a first traditional upstream transmit signal TUT**1** to the first traditional RF transmit circuitry **24**. The first traditional upstream transmit signal TUT**1** may be a baseband transmit signal, an intermediate frequency (IF) transmit signal, or an RF transmit signal. Conversely, the traditional RF system control circuitry **12** receives a first traditional downstream receive signal TDR**1** from the first traditional RF receive circuitry **22**. The first traditional downstream receive signal TDR**1** may be a baseband receive signal, an IF receive signal, or an RF receive signal.

The first traditional RF transmit circuitry **24** may include up-conversion circuitry, amplification circuitry, power supply circuitry, filtering circuitry, switching circuitry, combining circuitry, splitting circuitry, dividing circuitry, clocking

circuitry, the like, or any combination thereof. Similarly, the first traditional RF receive circuitry **22** may include down-conversion circuitry, amplification circuitry, power supply circuitry, filtering circuitry, switching circuitry, combining circuitry, splitting circuitry, dividing circuitry, clocking circuitry, the like, or any combination thereof.

The traditional RF system control circuitry **12** provides a traditional front-end control signal TFEC to the traditional RF front-end control circuitry **18**. The traditional RF front-end control circuitry **18** provides a first traditional switch control signal TCS**1** and a second traditional switch control signal TCS**2** to the first traditional RF switch **26** and the second traditional RF switch **28**, respectively, based on the traditional front-end control signal TFEC. As such, the traditional RF system control circuitry **12** controls the first traditional RF switch **26** and the second traditional RF switch **28** via the traditional front-end control signal TFEC. The first traditional RF switch **26** is in one of an ON state and an OFF state based on the first traditional switch control signal TCS**1**. The second traditional RF switch **28** is in one of an ON state and an OFF state based on the second traditional switch control signal TCS**2**.

Half-duplex operation of the traditional communications circuitry **10** is accomplished using the first traditional RF switch **26** and the second traditional RF switch **28**. When the traditional communications circuitry **10** is transmitting RF signals via the first RF antenna **16**, the first traditional RF switch **26** is in the OFF state and the second traditional RF switch **28** is in the ON state. As such, the first traditional antenna matching circuitry **20** is electrically isolated from the first traditional RF receive circuitry **22** and the first traditional antenna matching circuitry **20** is electrically coupled to the first traditional RF transmit circuitry **24**. In this regard, the traditional RF system control circuitry **12** provides the first traditional upstream transmit signal TUT**1** to the first traditional RF transmit circuitry **24**, which provides a traditional transmit signal TTX to the first RF antenna **16** via the second traditional RF switch **28** and the first traditional antenna matching circuitry **20** based on the first traditional upstream transmit signal TUT**1**.

When the traditional communications circuitry **10** is receiving RF signals via the first RF antenna **16**, the first traditional RF switch **26** is in the ON state and the second traditional RF switch **28** is in the OFF state. As such, the first traditional antenna matching circuitry **20** is isolated from the first traditional RF transmit circuitry **24** and the first traditional antenna matching circuitry **20** is electrically coupled to the first traditional RF receive circuitry **22**. In this regard, the first traditional antenna matching circuitry **20** receives the RF signals from the first RF antenna **16** and forwards the RF signals via the first traditional RF switch **26** to the first traditional RF receive circuitry **22**. The first traditional RF switch **26** provides a traditional receive signal TRX to the first traditional RF receive circuitry **22**, which provides a first traditional downstream receive signal TDR**1** to the traditional RF system control circuitry **12** based on the traditional receive signal TRX.

Since the traditional communications circuitry **10** illustrated in FIG. **1** is a half-duplex system, during operation, the first traditional RF switch **26** and the second traditional RF switch **28** are not simultaneously in the ON state. Therefore, the first traditional RF receive circuitry **22** and the first traditional RF transmit circuitry **24** are isolated from one another. As such, the first traditional RF receive circuitry **22** and the first traditional RF transmit circuitry **24** are prevented from interfering with one another.

FIG. **2** shows the traditional communications circuitry **10** according to the prior art. The traditional communications circuitry **10** illustrated in FIG. **2** is similar to the traditional communications circuitry **10** illustrated in FIG. **1**, except in the traditional communications circuitry **10** illustrated in FIG. **2**, the traditional RF front-end control circuitry **18**, the first traditional RF switch **26**, and the second traditional RF switch **28** are omitted, and the traditional RF front-end circuitry **14** further includes a first traditional RF duplexer **30**. The first traditional RF duplexer **30** is coupled between the first traditional antenna matching circuitry **20** and the first traditional RF receive circuitry **22**, and is further coupled between the first traditional antenna matching circuitry **20** and the first traditional RF transmit circuitry **24**.

The traditional communications circuitry **10** illustrated in FIG. **2** may be used as a TDD system or a simplex system. However, the traditional communications circuitry **10** illustrated in FIG. **2** may also be used as a frequency-division duplex (FDD) system, which is capable of transmitting and receiving RF signals simultaneously. Such a system may also be called a full-duplex system.

When the traditional communications circuitry **10** is transmitting RF signals via the first RF antenna **16**, the traditional RF system control circuitry **12** provides the first traditional upstream transmit signal TUT**1** to the first traditional RF transmit circuitry **24**, which provides the traditional transmit signal TTX to the first RF antenna **16** via first traditional RF duplexer **30** based on the first traditional upstream transmit signal TUT**1**.

When the traditional communications circuitry **10** is receiving RF signals via the first RF antenna **16**, the first traditional antenna matching circuitry **20** receives the RF signals from the first RF antenna **16** and forwards the RF signals via the first traditional RF duplexer **30** to the first traditional RF receive circuitry **22**. As such, the first traditional RF duplexer **30** provides the traditional receive signal TRX to the first traditional RF receive circuitry **22**, which provides the first traditional downstream receive signal TDR**1** to the traditional RF system control circuitry **12** based on the traditional receive signal TRX.

The first traditional RF duplexer **30** provides filtering, such that the first traditional RF receive circuitry **22** and the first traditional RF transmit circuitry **24** are substantially isolated from one another. As such, the first traditional RF receive circuitry **22** and the first traditional RF transmit circuitry **24** are prevented from interfering with one another. Traditional FDD systems using duplexers with high rejection ratios have a fixed frequency transfer. Covering multiple communications bands requires multiple duplexers and switches to route RF signals through appropriate signal paths.

FIG. **3** shows the traditional communications circuitry **10** according to the prior art. The traditional communications circuitry **10** illustrated in FIG. **3** is a carrier aggregation (CA) based system, which is capable of transmitting or receiving multiple simultaneous transmit signals or multiple simultaneous receive signals, respectively, or both. Each of the simultaneous transmit signals is in a frequency band that is different from each frequency band of a balance of the simultaneous transmit signals. Similarly, each of the simultaneous receive signals is in a frequency band that is different from each frequency band of a balance of the simultaneous receive signals. The traditional communications circuitry **10** may operate as a simplex system, a half-duplex system, or a full-duplex system.

The traditional communications circuitry **10** includes the traditional RF system control circuitry **12**, the traditional RF

front-end circuitry **14**, the first RF antenna **16**, and a second RF antenna **32**. The traditional RF front-end circuitry **14** includes the first traditional antenna matching circuitry **20**, the first traditional RF receive circuitry **22**, the first traditional RF transmit circuitry **24**, the first traditional RF duplexer **30**, first traditional antenna switching circuitry **34**, a second traditional RF duplexer **36**, a third traditional RF duplexer **38**, second traditional antenna matching circuitry **40**, second traditional antenna switching circuitry **42**, a fourth traditional RF duplexer **44**, a fifth traditional RF duplexer **46**, a sixth traditional RF duplexer **48**, second traditional RF receive circuitry **50**, and second traditional RF transmit circuitry **52**. Traditional CA systems use fixed frequency filters and diplexers, triplexers, or both to combine signal paths, which increases complexity. Alternatively, additional switch paths may be used, but may degrade performance.

The first traditional antenna matching circuitry **20** is coupled between the first RF antenna **16** and the first traditional antenna switching circuitry **34**. The second traditional antenna matching circuitry **40** is coupled between the second RF antenna **32** and the second traditional antenna switching circuitry **42**. The first traditional RF duplexer **30** is coupled between the first traditional antenna switching circuitry **34** and the first traditional RF receive circuitry **22**, and is further coupled between the first traditional antenna switching circuitry **34** and the first traditional RF transmit circuitry **24**. The second traditional RF duplexer **36** is coupled between the first traditional antenna switching circuitry **34** and the first traditional RF receive circuitry **22**, and is further coupled between the first traditional antenna switching circuitry **34** and the first traditional RF transmit circuitry **24**. The third traditional RF duplexer **38** is coupled between the first traditional antenna switching circuitry **34** and the first traditional RF receive circuitry **22**, and is further coupled between the first traditional antenna switching circuitry **34** and the first traditional RF transmit circuitry **24**.

The fourth traditional RF duplexer **44** is coupled between the second traditional antenna switching circuitry **42** and the second traditional RF receive circuitry **50**, and is further coupled between the second traditional antenna switching circuitry **42** and the second traditional RF transmit circuitry **52**. The fifth traditional RF duplexer **46** is coupled between the second traditional antenna switching circuitry **42** and the second traditional RF receive circuitry **50**, and is further coupled between the second traditional antenna switching circuitry **42** and the second traditional RF transmit circuitry **52**. The sixth traditional RF duplexer **48** is coupled between the second traditional antenna switching circuitry **42** and the second traditional RF receive circuitry **50**, and is further coupled between the second traditional antenna switching circuitry **42** and the second traditional RF transmit circuitry **52**.

The first traditional RF duplexer **30** is associated with a first aggregated receive band, a first aggregated transmit band, or both. The second traditional RF duplexer **36** is associated with a second aggregated receive band, a second aggregated transmit band, or both. The third traditional RF duplexer **38** is associated with a third aggregated receive band, a third aggregated transmit band, or both. The fourth traditional RF duplexer **44** is associated with a fourth aggregated receive band, a fourth aggregated transmit band, or both. The fifth traditional RF duplexer **46** is associated with a fifth aggregated receive band, a fifth aggregated transmit band, or both. The sixth traditional RF duplexer **48** is associated with a sixth aggregated receive band, a sixth aggregated transmit band, or both.

The first traditional antenna switching circuitry **34** couples a selected one of the first traditional RF duplexer **30**, the second traditional RF duplexer **36**, and the third traditional RF duplexer **38** to the first traditional antenna matching circuitry **20**. Therefore, the first RF antenna **16** is associated with a selected one of the first aggregated receive band, the second aggregated receive band, and the third aggregated receive band; with a selected one of the first aggregated transmit band, the second aggregated transmit band, and the third aggregated transmit band; or both.

Similarly, the second traditional antenna switching circuitry **42** couples a selected one of the fourth traditional RF duplexer **44**, the fifth traditional RF duplexer **46**, and the sixth traditional RF duplexer **48** to the second traditional antenna matching circuitry **40**. Therefore, the second RF antenna **32** is associated with a selected one of the fourth aggregated receive band, the fifth aggregated receive band, and the sixth aggregated receive band; with a selected one of the fourth aggregated transmit band, the fifth aggregated transmit band, and the sixth aggregated transmit band; or both.

During transmit CA, the traditional RF system control circuitry **12** provides the first traditional upstream transmit signal TUT**1** to the first traditional RF transmit circuitry **24**, which forwards the first traditional upstream transmit signal TUT**1** to the first RF antenna **16** for transmission via the selected one of the first traditional RF duplexer **30**, the second traditional RF duplexer **36**, and the third traditional RF duplexer **38**; via the first traditional antenna switching circuitry **34**; and via the first traditional antenna matching circuitry **20**.

Additionally, during transmit CA, the traditional RF system control circuitry **12** provides a second traditional upstream transmit signal TUT**2** to the second traditional RF transmit circuitry **52**, which forwards the second traditional upstream transmit signal TUT**2** to the second RF antenna **32** for transmission via the selected one of the fourth traditional RF duplexer **44**, the fifth traditional RF duplexer **46**, and the sixth traditional RF duplexer **48**; via the second traditional antenna switching circuitry **42**; and via the second traditional antenna matching circuitry **40**.

During receive CA, the first RF antenna **16** forwards a received RF signal to the first traditional RF receive circuitry **22** via the first traditional antenna matching circuitry **20**, the first traditional antenna switching circuitry **34**, and the selected one of the first traditional RF duplexer **30**, the second traditional RF duplexer **36**, and the third traditional RF duplexer **38**. The first traditional RF receive circuitry **22** provides the first traditional downstream receive signal TDR**1** to the traditional RF system control circuitry **12** based on the received RF signal.

Additionally, during receive CA, the second RF antenna **32** forwards a received RF signal to the second traditional RF receive circuitry **50** via the second traditional antenna matching circuitry **40**, the second traditional antenna switching circuitry **42**, and the selected one of the fourth traditional RF duplexer **44**, the fifth traditional RF duplexer **46**, and the sixth traditional RF duplexer **48**. The second traditional RF receive circuitry **50** provides a second traditional downstream receive signal TDR**2** to the traditional RF system control circuitry **12** based on the received RF signal.

Since only the selected one of the first traditional RF duplexer **30**, the second traditional RF duplexer **36**, and the third traditional RF duplexer **38** is coupled to the first traditional antenna matching circuitry **20**; the first traditional antenna switching circuitry **34** isolates each of the first traditional RF duplexer **30**, the second traditional RF

duplexer **36**, and the third traditional RF duplexer **38** from one another; and prevents each of the first traditional RF duplexer **30**, the second traditional RF duplexer **36**, and the third traditional RF duplexer **38** from interfering with one another.

Similarly, since only the selected one of the fourth traditional RF duplexer **44**, the fifth traditional RF duplexer **46**, and the sixth traditional RF duplexer **48** is coupled to the second traditional antenna matching circuitry **40**; the second traditional antenna matching circuitry **40** isolates each of the fourth traditional RF duplexer **44**, the fifth traditional RF duplexer **46**, and the sixth traditional RF duplexer **48** from one another; and prevents each of the fourth traditional RF duplexer **44**, the fifth traditional RF duplexer **46**, and the sixth traditional RF duplexer **48** from interfering with one another.

FIG. **4** shows RF communications circuitry **54** according to one embodiment of the RF communications circuitry **54**. The RF communications circuitry **54** includes RF system control circuitry **56**, RF front-end circuitry **58**, and the first RF antenna **16**. The RF front-end circuitry **58** includes a first RF filter structure **60**, RF receive circuitry **62**, and RF transmit circuitry **64**. The first RF filter structure **60** includes a first tunable RF filter path **66** and a second tunable RF filter path **68**. Additionally, the first RF filter structure **60** has a first connection node **70**, a second connection node **72**, and a first common connection node **74**. In one embodiment of the RF system control circuitry **56**, the RF system control circuitry **56** is an RF transceiver. In one embodiment of the first tunable RF filter path **66**, the first tunable RF filter path **66** includes a pair of weakly coupled resonators R(**1**,**1**), R(**1**,**2**) (FIG. **22**). As such, in one embodiment of the first RF filter structure **60**, the RF filter structure **60** includes the pair of weakly coupled resonators R(**1**,**1**), R(**1**,**2**) (FIG. **21**).

In alternate embodiments of the first RF filter structure **60**, any or all of the first connection node **70**, the second connection node **72**, and the first common connection node **74** are external to the first RF filter structure **60**. In one embodiment of the first tunable RF filter path **66**, the first tunable RF filter path **66** includes a first pair (not shown) of weakly coupled resonators. In one embodiment of the second tunable RF filter path **68**, the second tunable RF filter path **68** includes a second pair (not shown) of weakly coupled resonators.

In one embodiment of the first RF filter structure **60**, the first tunable RF filter path **66** is directly coupled between the first common connection node **74** and the first connection node **70**, the second tunable RF filter path **68** is directly coupled between the second connection node **72** and the first common connection node **74**, and the first RF antenna **16** is directly coupled to the first common connection node **74**. In another embodiment of the RF communications circuitry **54**, the first RF antenna **16** is omitted. Additionally, the RF receive circuitry **62** is coupled between the first connection node **70** and the RF system control circuitry **56**, and the RF transmit circuitry **64** is coupled between the second connection node **72** and the RF system control circuitry **56**.

In one embodiment of the RF communications circuitry **54**, the first tunable RF filter path **66** is a first RF receive filter, such that the first RF antenna **16** forwards a received RF signal via the first common connection node **74** to provide a first upstream RF receive signal RU**1** to the first tunable RF filter path **66**, which receives and filters the first upstream RF receive signal RU**1** to provide a first filtered RF receive signal RF**1** to the RF receive circuitry **62**. The RF receive circuitry **62** may include down-conversion circuitry, amplification circuitry, power supply circuitry, filtering circuitry, switching circuitry, combining circuitry, splitting circuitry, dividing circuitry, clocking circuitry, the like, or any combination thereof. The RF receive circuitry **62** processes the first filtered RF receive signal RF**1** to provide a first receive signal RX**1** to the RF system control circuitry **56**.

In one embodiment of the RF communications circuitry **54**, the second tunable RF filter path **68** is a first RF transmit filter, such that the RF system control circuitry **56** provides a first transmit signal TX**1** to the RF transmit circuitry **64**, which processes the first transmit signal TX**1** to provide a first upstream RF transmit signal TU**1** to the second tunable RF filter path **68**. The RF transmit circuitry **64** may include up-conversion circuitry, amplification circuitry, power supply circuitry, filtering circuitry, switching circuitry, combining circuitry, splitting circuitry, dividing circuitry, clocking circuitry, the like, or any combination thereof. The second tunable RF filter path **68** receives and filters the first upstream RF transmit signal TU**1** to provide a first filtered RF transmit signal TF**1**, which is transmitted via the first common connection node **74** by the first RF antenna **16**.

The RF system control circuitry **56** provides a first filter control signal FCS**1** to the first tunable RF filter path **66** and provides a second filter control signal FCS**2** to the second tunable RF filter path **68**. As such, in one embodiment of the RF communications circuitry **54**, the RF system control circuitry **56** tunes a first filter parameter of the first tunable RF filter path **66** using the first filter control signal FCS**1**. Additionally, the RF system control circuitry **56** tunes a first filter parameter of the second tunable RF filter path **68** using the second filter control signal FCS**2**.

In one embodiment of the RF communications circuitry **54**, the first tunable RF filter path **66** and the second tunable RF filter path **68** do not significantly load one another at frequencies of interest. As such, by directly coupling the first tunable RF filter path **66** and the second tunable RF filter path **68** to the first common connection node **74**; front-end RF switching elements may be avoided, thereby reducing cost, size, and non-linearity; and increasing efficiency and flexibility of the RF communications circuitry **54**. Since tunable RF filters can support multiple communications bands using a single signal path, they can simplify front-end architectures by eliminating switching and duplexing components.

In one embodiment of the RF communications circuitry **54**, the RF communications circuitry **54** is used as an FDD communications system, such that the first upstream RF receive signal RU**1** and the first filtered RF transmit signal TF**1** are full-duplex signals. In an alternate embodiments of the RF communications circuitry **54**, the RF communications circuitry **54** is used as a TDD communications system, such that the first upstream RF receive signal RU**1** and the first filtered RF transmit signal TF**1** are half-duplex signals. In additional embodiments of the RF communications circuitry **54**, the RF communications circuitry **54** is used as a simplex communications system, such that the first upstream RF receive signal RU**1** is a simplex signal and the first filtered RF transmit signal TF**1** is not present. In other embodiments of the RF communications circuitry **54**, the RF communications circuitry **54** is used as a simplex communications system, such that the first upstream RF receive signal RU**1** is not present and the first filtered RF transmit signal TF**1** is a simplex signal.

FIG. **5** is a graph illustrating filtering characteristics of the first tunable RF filter path **66** and the second tunable RF filter path **68** illustrated in FIG. **4** according to one embodiment of the first tunable RF filter path **66** and the second

tunable RF filter path **68**. The first tunable RF filter path **66** is a first RF bandpass filter, which functions as the first RF receive filter, and the second tunable RF filter path **68** is a second RF bandpass filter, which functions as the first RF transmit filter. A bandwidth **76** of the first RF bandpass filter, a center frequency **78** of the first RF bandpass filter, a bandwidth **80** of the second RF bandpass filter, a center frequency **82** of the second RF bandpass filter, a frequency **84** of the first upstream RF receive signal RU**1** (FIG. **4**), and a frequency **86** of the first filtered RF transmit signal TF**1** (FIG. **4**) are shown. Operation of the first RF bandpass filter and the second RF bandpass filter is such that the first RF bandpass filter and the second RF bandpass filter do not significantly interfere with one another. In this regard, the bandwidth **76** of the first RF bandpass filter does not overlap the bandwidth **80** of the second RF bandpass filter.

In one embodiment of the first RF receive filter and the first RF transmit filter, the first RF receive filter and the first RF transmit filter in combination function as an RF duplexer. As such, a duplex frequency **88** of the RF duplexer is about equal to a difference between the frequency **84** of the first upstream RF receive signal RU**1** (FIG. **4**) and the frequency **86** of the first filtered RF transmit signal TF**1** (FIG. **4**).

In one embodiment of the first tunable RF filter path **66**, the first filter parameter of the first tunable RF filter path **66** is tunable based on the first filter control signal FCS**1**. In an alternate embodiment of the first tunable RF filter path **66**, both the first filter parameter of the first tunable RF filter path **66** and a second filter parameter of the first tunable RF filter path **66** are tunable based on the first filter control signal FCS**1**. Similarly, in one embodiment of the second tunable RF filter path **68**, the first filter parameter of the second tunable RF filter path **68** is tunable based on the second filter control signal FCS**2**. In an alternate embodiment of the second tunable RF filter path **68**, both the first filter parameter of the second tunable RF filter path **68** and a second filter parameter of the second tunable RF filter path **68** are tunable based on the second filter control signal FCS**2**.

The first filter parameter of the first tunable RF filter path **66** is the center frequency **78** of the first RF bandpass filter. The second filter parameter of the first tunable RF filter path **66** is the bandwidth **76** of the first RF bandpass filter. The first filter parameter of the second tunable RF filter path **68** is the center frequency **82** of the second RF bandpass filter. The second filter parameter of the second tunable RF filter path **68** is the bandwidth **80** of the second RF bandpass filter.

FIGS. **6**A and **6**B are graphs illustrating filtering characteristics of the first tunable RF filter path **66** and the second tunable RF filter path **68**, respectively, illustrated in FIG. **4** according to an alternate embodiment of the first tunable RF filter path **66** and the second tunable RF filter path **68**, respectively. The first tunable RF filter path **66** is an RF lowpass filter and the second tunable RF filter path **68** is an RF highpass filter. FIG. **6**A shows a frequency response curve **90** of the RF lowpass filter and FIG. **6**B shows a frequency response curve **92** of the RF highpass filter. Additionally FIG. **6**A shows a break frequency **94** of the RF lowpass filter and FIG. **6**B shows a break frequency **96** of the RF highpass filter. Both FIGS. **6**A and **6**B show the frequency **84** of the first upstream RF receive signal RU**1** (FIG. **4**), the frequency **86** of the first filtered RF transmit signal TF**1** (FIG. **4**), and the duplex frequency **88** of the RF duplexer for clarification. However, the RF lowpass filter and the RF highpass filter in combination function as an RF diplexer. The first filter parameter of the first tunable RF filter path **66** is the break frequency **94** of the RF lowpass filter. In one embodiment of the RF lowpass filter, the RF lowpass filter has bandpass filter characteristics. The first filter parameter of the second tunable RF filter path **68** is the break frequency **96** of the RF highpass filter. In one embodiment of the RF highpass filter, the RF highpass filter has bandpass filter characteristics. In one embodiment of the RF diplexer, the break frequency **96** of the RF highpass filter is about equal to the break frequency **94** of the RF lowpass filter.

FIG. **7** shows the RF communications circuitry **54** according to one embodiment of the RF communications circuitry **54**. The RF communications circuitry **54** illustrated in FIG. **7** is similar to the RF communications circuitry **54** illustrated in FIG. **4**, except in the RF front-end circuitry **58** illustrated in FIG. **7**, the RF transmit circuitry **64** (FIG. **4**) is omitted and the RF front-end circuitry **58** further includes RF front-end control circuitry **98**.

The RF system control circuitry **56** provides a front-end control signal FEC to the RF front-end control circuitry **98**. The RF front-end control circuitry **98** provides the first filter control signal FCS**1** and the second filter control signal FCS**2** based on the front-end control signal FEC. In the RF communications circuitry **54** illustrated in FIG. **4**, the RF system control circuitry **56** provides the first filter control signal FCS**1** and the second filter control signal FCS**2** directly. In general, the RF communications circuitry **54** includes control circuitry, which may be either the RF system control circuitry **56** or the RF front-end control circuitry **98**, that provides the first filter control signal FCS**1** and the second filter control signal FCS**2**. As such, in one embodiment of the RF communications circuitry **54**, the control circuitry tunes a first filter parameter of the first tunable RF filter path **66** using the first filter control signal FCS**1**. Additionally, the control circuitry tunes a first filter parameter of the second tunable RF filter path **68** using the second filter control signal FCS**2**. In an additional embodiment of the RF communications circuitry **54**, the control circuitry further tunes a second filter parameter of the first tunable RF filter path **66** using the first filter control signal FCS**1**; and the control circuitry further tunes a second filter parameter of the second tunable RF filter path **68** using the second filter control signal FCS**2**.

In alternate embodiments of the first RF filter structure **60**, any or all of the first connection node **70**, the second connection node **72**, and the first common connection node **74** are external to the first RF filter structure **60**. In one embodiment of the first tunable RF filter path **66**, the first tunable RF filter path **66** includes a first pair (not shown) of weakly coupled resonators. In one embodiment of the second tunable RF filter path **68**, the second tunable RF filter path **68** includes a second pair (not shown) of weakly coupled resonators.

In one embodiment of the first RF filter structure **60**, the first tunable RF filter path **66** is directly coupled between the first common connection node **74** and the first connection node **70**, the second tunable RF filter path **68** is directly coupled between the second connection node **72** and the first common connection node **74**, and the first RF antenna **16** is directly coupled to the first common connection node **74**. In another embodiment of the RF communications circuitry **54**, the first RF antenna **16** is omitted. Additionally, the RF receive circuitry **62** is coupled between the first connection node **70** and the RF system control circuitry **56**, and the RF receive circuitry **62** is further coupled between the second connection node **72** and the RF system control circuitry **56**.

In one embodiment of the RF communications circuitry **54**, the first tunable RF filter path **66** is a first RF receive

filter, such that the first RF antenna **16** forwards a first received RF signal via the first common connection node **74** to provide a first upstream RF receive signal RU**1** to the first tunable RF filter path **66**, which receives and filters the first upstream RF receive signal RU**1** to provide a first filtered RF receive signal RF**1** to the RF receive circuitry **62**. Additionally, the second tunable RF filter path **68** is a second RF receive filter, such that the first RF antenna **16** forwards a second received RF signal via the first common connection node **74** to provide a second upstream RF receive signal RU**2** to the second tunable RF filter path **68**, which receives and filters the second upstream RF receive signal RU**2** to provide a second filtered RF receive signal RF**2** to the RF receive circuitry **62**.

The RF receive circuitry **62** may include down-conversion circuitry, amplification circuitry, power supply circuitry, filtering circuitry, switching circuitry, combining circuitry, splitting circuitry, dividing circuitry, clocking circuitry, the like, or any combination thereof. The RF receive circuitry **62** processes the first filtered RF receive signal RF**1** to provide a first receive signal RX**1** to the RF system control circuitry **56**. Additionally, the RF receive circuitry **62** processes the second filtered RF receive signal RF**2** to provide a second receive signal RX**2** to the RF system control circuitry **56**.

In one embodiment of the RF communications circuitry **54**, the first tunable RF filter path **66** and the second tunable RF filter path **68** do not significantly load one another at frequencies of interest. As such, by directly coupling the first tunable RF filter path **66** and the second tunable RF filter path **68** to the first common connection node **74**; front-end RF switching elements may be avoided, thereby reducing cost, size, and non-linearity; and increasing efficiency and flexibility of the RF communications circuitry **54**.

In this regard, in one embodiment of the first tunable RF filter path **66** and the second tunable RF filter path **68**, each of the first tunable RF filter path **66** and the second tunable RF filter path **68** is a bandpass filter having a unique center frequency. As such, the first filter parameter of each of the first tunable RF filter path **66** and the second tunable RF filter path **68** is a unique center frequency.

In an alternate embodiment of the first tunable RF filter path **66** and the second tunable RF filter path **68**, one of the first tunable RF filter path **66** and the second tunable RF filter path **68** is a lowpass filter, and another of the first tunable RF filter path **66** and the second tunable RF filter path **68** is a highpass filter. As such, the first filter parameter of each of the first tunable RF filter path **66** and the second tunable RF filter path **68** is a break frequency.

In an additional embodiment of the first tunable RF filter path **66** and the second tunable RF filter path **68**, one of the first tunable RF filter path **66** and the second tunable RF filter path **68** is a lowpass filter, and another of the first tunable RF filter path **66** and the second tunable RF filter path **68** is a bandpass filter. As such, the first filter parameter of one of the first tunable RF filter path **66** and the second tunable RF filter path **68** is a center frequency, and the first filter parameter of another of the first tunable RF filter path **66** and the second tunable RF filter path **68** is a break frequency.

In an additional embodiment of the first tunable RF filter path **66** and the second tunable RF filter path **68**, one of the first tunable RF filter path **66** and the second tunable RF filter path **68** is a highpass filter, and another of the first tunable RF filter path **66** and the second tunable RF filter path **68** is a bandpass filter. As such, the first filter parameter of one of the first tunable RF filter path **66** and the second tunable RF filter path **68** is a center frequency, and the first filter parameter of another of the first tunable RF filter path **66** and the second tunable RF filter path **68** is a break frequency.

In one embodiment of the RF communications circuitry **54**, the RF communications circuitry **54** is a receive only CA system, such that the first tunable RF filter path **66**, which is the first RF receive filter, and the second tunable RF filter path **68**, which is the second RF receive filter, simultaneously receive and filter the first upstream RF receive signal RU**1** and the second upstream RF receive signal RU**2**, respectively, via the first common connection node **74**. As such, the first RF filter structure **60** functions as a demultiplexer. In this regard, each of the first upstream RF receive signal RU**1** and the second upstream RF receive signal RU**2** has a unique carrier frequency. Using receive CA may increase an effective receive bandwidth of the RF communications circuitry **54**.

In another embodiment of the RF communications circuitry **54**, the RF communications circuitry **54** is a receive only communications system, such that the first tunable RF filter path **66**, which is the first RF receive filter, and the second tunable RF filter path **68**, which is the second RF receive filter, do not simultaneously receive and filter the first upstream RF receive signal RU**1** and the second upstream RF receive signal RU**2**, respectively. As such, the first upstream RF receive signal RU**1** and the second upstream RF receive signal RU**2** are nonsimultaneous signals. Each of the first upstream RF receive signal RU**1** and the second upstream RF receive signal RU**2** may be associated with a unique RF communications band.

FIG. **8** shows the RF communications circuitry **54** according to an alternate embodiment of the RF communications circuitry **54**. The RF communications circuitry **54** illustrated in FIG. **8** is similar to the RF communications circuitry **54** illustrated in FIG. **7**, except in the RF front-end circuitry **58** illustrated in FIG. **8**, the RF receive circuitry **62** is omitted and the RF transmit circuitry **64** is included.

The RF system control circuitry **56** provides the front-end control signal FEC to the RF front-end control circuitry **98**. The RF front-end control circuitry **98** provides the first filter control signal FCS**1** and the second filter control signal FCS**2** based on the front-end control signal FEC. In the RF communications circuitry **54** illustrated in FIG. **4**, the RF system control circuitry **56** provides the first filter control signal FCS**1** and the second filter control signal FCS**2** directly. In general, the RF communications circuitry **54** includes control circuitry, which may be either the RF system control circuitry **56** or the RF front-end control circuitry **98**, that provides the first filter control signal FCS**1** and the second filter control signal FCS**2**. As such, in one embodiment of the RF communications circuitry **54**, the control circuitry tunes a first filter parameter of the first tunable RF filter path **66** using the first filter control signal FCS**1**. Additionally, the control circuitry tunes a first filter parameter of the second tunable RF filter path **68** using the second filter control signal FCS**2**. In an additional embodiment of the RF communications circuitry **54**, the control circuitry further tunes a second filter parameter of the first tunable RF filter path **66** using the first filter control signal FCS**1**; and the control circuitry further tunes a second filter parameter of the second tunable RF filter path **68** using the second filter control signal FCS**2**.

In alternate embodiments of the first RF filter structure **60**, any or all of the first connection node **70**, the second connection node **72**, and the first common connection node **74** are external to the first RF filter structure **60**. In one

embodiment of the first tunable RF filter path **66**, the first tunable RF filter path **66** includes a first pair (not shown) of weakly coupled resonators. In one embodiment of the second tunable RF filter path **68**, the second tunable RF filter path **68** includes a second pair (not shown) of weakly coupled resonators.

In one embodiment of the first RF filter structure **60**, the first tunable RF filter path **66** is directly coupled between the first common connection node **74** and the first connection node **70**, the second tunable RF filter path **68** is directly coupled between the second connection node **72** and the first common connection node **74**, and the first RF antenna **16** is directly coupled to the first common connection node **74**. In another embodiment of the RF communications circuitry **54**, the first RF antenna **16** is omitted. Additionally, the RF transmit circuitry **64** is coupled between the first connection node **70** and the RF system control circuitry **56**, and the RF transmit circuitry **64** is further coupled between the second connection node **72** and the RF system control circuitry **56**.

In one embodiment of the RF communications circuitry **54**, the first tunable RF filter path **66** is a first RF transmit filter, such that the RF system control circuitry **56** provides the first transmit signal TX**1** to the RF transmit circuitry **64**, which processes the first transmit signal TX**1** to provide a first upstream RF transmit signal TU**1** to the first tunable RF filter path **66**. Similarly, the second tunable RF filter path **68** is a second RF transmit filter, such that the RF system control circuitry **56** provides a second transmit signal TX**2** to the RF transmit circuitry **64**, which processes the second transmit signal TX**2** to provide a second upstream RF transmit signal TU**2** to the second tunable RF filter path **68**.

The RF transmit circuitry **64** may include up-conversion circuitry, amplification circuitry, power supply circuitry, filtering circuitry, switching circuitry, combining circuitry, splitting circuitry, dividing circuitry, clocking circuitry, the like, or any combination thereof. The first tunable RF filter path **66** receives and filters the first upstream RF transmit signal TU**1** to provide the first filtered RF transmit signal TF**1**, which is transmitted via the first common connection node **74** by the first RF antenna **16**. Similarly, the second tunable RF filter path **68** receives and filters the second upstream RF transmit signal TU**2** to provide a second filtered RF transmit signal TF**2**, which is transmitted via the first common connection node **74** by the first RF antenna **16**.

In one embodiment of the RF communications circuitry **54**, the first tunable RF filter path **66** and the second tunable RF filter path **68** do not significantly load one another at frequencies of interest. As such, by directly coupling the first tunable RF filter path **66** and the second tunable RF filter path **68** to the first common connection node **74**; front-end RF switching elements may be avoided, thereby reducing cost, size, and non-linearity; and increasing efficiency and flexibility of the RF communications circuitry **54**.

In this regard, in one embodiment of the first tunable RF filter path **66** and the second tunable RF filter path **68**, each of the first tunable RF filter path **66** and the second tunable RF filter path **68** is a bandpass filter having a unique center frequency. As such, the first filter parameter of each of the first tunable RF filter path **66** and the second tunable RF filter path **68** is a unique center frequency.

In an alternate embodiment of the first tunable RF filter path **66** and the second tunable RF filter path **68**, one of the first tunable RF filter path **66** and the second tunable RF filter path **68** is a lowpass filter, and another of the first tunable RF filter path **66** and the second tunable RF filter path **68** is a highpass filter. As such, the first filter parameter of each of the first tunable RF filter path **66** and the second tunable RF filter path **68** is a break frequency.

In an additional embodiment of the first tunable RF filter path **66** and the second tunable RF filter path **68**, one of the first tunable RF filter path **66** and the second tunable RF filter path **68** is a lowpass filter, and another of the first tunable RF filter path **66** and the second tunable RF filter path **68** is a bandpass filter. As such, the first filter parameter of one of the first tunable RF filter path **66** and the second tunable RF filter path **68** is a center frequency, and the first filter parameter of another of the first tunable RF filter path **66** and the second tunable RF filter path **68** is a break frequency.

In an additional embodiment of the first tunable RF filter path **66** and the second tunable RF filter path **68**, one of the first tunable RF filter path **66** and the second tunable RF filter path **68** is a highpass filter, and another of the first tunable RF filter path **66** and the second tunable RF filter path **68** is a bandpass filter. As such, the first filter parameter of one of the first tunable RF filter path **66** and the second tunable RF filter path **68** is a center frequency, and the first filter parameter of another of the first tunable RF filter path **66** and the second tunable RF filter path **68** is a break frequency.

In one embodiment of the RF communications circuitry **54**, the RF communications circuitry **54** is a transmit only CA system, such that the first tunable RF filter path **66**, which is the first RF transmit filter, and the second tunable RF filter path **68**, which is the second RF transmit filter, simultaneously receive and filter the first upstream RF transmit signal TU**1** and the second upstream RF transmit signal TU**2**, respectively, to simultaneously provide the first filtered RF transmit signal TF**1** and the second filtered RF transmit signal TF**2**, respectively, via the first common connection node **74**. As such, the first RF filter structure **60** functions as a multiplexer. In this regard, each of the first filtered RF transmit signal TF**1** and the second filtered RF transmit signal TF**2** has a unique carrier frequency. Using transmit CA may increase an effective transmit bandwidth of the RF communications circuitry **54**.

In another embodiment of the RF communications circuitry **54**, the RF communications circuitry **54** is a transmit only communications system, such that the first tunable RF filter path **66**, which is the first RF transmit filter, and the second tunable RF filter path **68**, which is the second RF transmit filter, do not simultaneously receive and filter the first upstream RF transmit signal TU**1** and the second upstream RF transmit signal TU**2**, respectively. As such, the first filtered RF transmit signal TF**1** and the second filtered RF transmit signal TF**2** are nonsimultaneous signals. Each of the first filtered RF transmit signal TF**1** and the second filtered RF transmit signal TF**2** may be associated with a unique RF communications band.

FIGS. **9**A and **9**B are graphs illustrating filtering characteristics of the first tunable RF filter path **66** and the second tunable RF filter path **68**, respectively, illustrated in FIG. **8** according to an additional embodiment of the first tunable RF filter path **66** and the second tunable RF filter path **68**, respectively. FIG. **9**A shows a frequency response curve **100** of the first tunable RF filter path **66** and FIG. **9**B shows a frequency response curve **102** of the second tunable RF filter path **68**. The first tunable RF filter path **66** and the second tunable RF filter path **68** are both bandpass filters having the frequency response curves **100**, **102** illustrated in FIGS. **9**A and **9**B, respectively. In this regard, the first tunable RF filter path **66** and the second tunable RF filter path **68** can be

directly coupled to one another via the first common connection node **74** (FIG. **8**) without interfering with one another.

FIGS. **10**A and **10**B are graphs illustrating filtering characteristics of the first traditional RF duplexer **30** and the second traditional RF duplexer **36**, respectively, illustrated in FIG. **3** according to the prior art. FIG. **10**A shows a frequency response curve **104** of the first traditional RF duplexer **30** and FIG. **10**B shows a frequency response curve **106** of the second traditional RF duplexer **36**. There is interference **108** between the frequency response curve **104** of the first traditional RF duplexer **30** and the frequency response curve **106** of the second traditional RF duplexer **36** as shown in FIGS. **10**A and **10**B. In this regard, the first traditional RF duplexer **30** and the second traditional RF duplexer **36** cannot be directly coupled to one another without interfering with one another. To avoid interference between different filters, traditional systems use RF switches to disconnect unused filters.

FIG. **11** shows the RF communications circuitry **54** according to one embodiment of the RF communications circuitry **54**. The RF communications circuitry **54** illustrated in FIG. **11** is similar to the RF communications circuitry **54** illustrated in FIG. **8**, except in the RF communications circuitry **54** illustrated in FIG. **11**, the RF front-end circuitry **58** further includes the RF receive circuitry **62** and the first RF filter structure **60** further includes a third tunable RF filter path **110** and a fourth tunable RF filter path **112**. Additionally, the RF front-end circuitry **58** has the first connection node **70**, the second connection node **72**, the first common connection node **74**, a third connection node **114** and a fourth connection node **116**, such that all of the first connection node **70**, the second connection node **72**, the first common connection node **74**, the third connection node **114** and the fourth connection node **116** are external to the first RF filter structure **60**. In an alternate of the RF front-end circuitry **58**, any or all of the first connection node **70**, the second connection node **72**, the first common connection node **74**, a third connection node **114** and a fourth connection node **116** are internal to the first RF filter structure **60**.

The RF front-end control circuitry **98** further provides a third filter control signal FCS**3** to the third tunable RF filter path **110** and a fourth filter control signal FCS**4** to the fourth tunable RF filter path **112** based on the front-end control signal FEC. In one embodiment of the RF communications circuitry **54**, the control circuitry tunes a first filter parameter of the third tunable RF filter path **110** using the third filter control signal FCS**3**. Additionally, the control circuitry tunes a first filter parameter of the fourth tunable RF filter path **112** using the fourth filter control signal FCS**4**. In an additional embodiment of the RF communications circuitry **54**, the control circuitry further tunes a second filter parameter of the third tunable RF filter path **110** using the third filter control signal FCS**3**; and the control circuitry further tunes a second filter parameter of the fourth tunable RF filter path **112** using the fourth filter control signal FCS**4**.

In one embodiment of the third tunable RF filter path **110**, the third tunable RF filter path **110** includes a third pair (not shown) of weakly coupled resonators. In one embodiment of the fourth tunable RF filter path **112**, the fourth tunable RF filter path **112** includes a fourth pair (not shown) of weakly coupled resonators.

In one embodiment of the third tunable RF filter path **110** and the fourth tunable RF filter path **112**, the third tunable RF filter path **110** is directly coupled between the first common connection node **74** and the third connection node **114**, and the fourth tunable RF filter path **112** is directly coupled between the fourth connection node **116** and the first common connection node **74**. In another embodiment of the RF communications circuitry **54**, the first RF antenna **16** is omitted. Additionally, the RF receive circuitry **62** is coupled between the third connection node **114** and the RF system control circuitry **56**, and the RF receive circuitry **62** is further coupled between the fourth connection node **116** and the RF system control circuitry **56**.

In one embodiment of the RF communications circuitry **54**, the third tunable RF filter path **110** is the first RF receive filter, such that the first RF antenna **16** forwards a first received RF signal via the first common connection node **74** to provide the first upstream RF receive signal RU**1** to the third tunable RF filter path **110**, which receives and filters the first upstream RF receive signal RU**1** to provide the first filtered RF receive signal RF**1** to the RF receive circuitry **62**. Additionally, the fourth tunable RF filter path **112** is a second RF receive filter, such that the first RF antenna **16** forwards a second received RF signal via the first common connection node **74** to provide the second upstream RF receive signal RU**2** to the fourth tunable RF filter path **112**, which receives and filters the second upstream RF receive signal RU**2** to provide the second filtered RF receive signal RF**2** to the RF receive circuitry **62**.

The RF receive circuitry **62** may include down-conversion circuitry, amplification circuitry, power supply circuitry, filtering circuitry, switching circuitry, combining circuitry, splitting circuitry, dividing circuitry, clocking circuitry, the like, or any combination thereof. The RF receive circuitry **62** processes the first filtered RF receive signal RF**1** to provide the first receive signal RX**1** to the RF system control circuitry **56**. Additionally, the RF receive circuitry **62** processes the second filtered RF receive signal RF**2** to provide the second receive signal RX**2** to the RF system control circuitry **56**.

In one embodiment of the RF communications circuitry **54**, the first tunable RF filter path **66**, the second tunable RF filter path **68**, the third tunable RF filter path **110**, and the fourth tunable RF filter path **112** do not significantly load one another at frequencies of interest. As such, by directly coupling the first tunable RF filter path **66**, the second tunable RF filter path **68**, the third tunable RF filter path **110**, and the fourth tunable RF filter path **112** to the first common connection node **74**; front-end RF switching elements may be avoided, thereby reducing cost, size, and non-linearity; and increasing efficiency and flexibility of the RF communications circuitry **54**.

In this regard, in one embodiment of the third tunable RF filter path **110** and the fourth tunable RF filter path **112**, each of the third tunable RF filter path **110** and the fourth tunable RF filter path **112** is a bandpass filter having a unique center frequency. As such, the first filter parameter of each of the third tunable RF filter path **110** and the fourth tunable RF filter path **112** is a unique center frequency.

In an alternate embodiment of the third tunable RF filter path **110** and the fourth tunable RF filter path **112**, one of the third tunable RF filter path **110** and the fourth tunable RF filter path **112** is a lowpass filter, and another of the third tunable RF filter path **110** and the fourth tunable RF filter path **112** is a highpass filter. As such, the first filter parameter of each of the third tunable RF filter path **110** and the fourth tunable RF filter path **112** is a break frequency.

In an additional embodiment of the third tunable RF filter path **110** and the fourth tunable RF filter path **112**, one of the third tunable RF filter path **110** and the fourth tunable RF filter path **112** is a lowpass filter, and another of the third tunable RF filter path **110** and the fourth tunable RF filter

path **112** is a bandpass filter. As such, the first filter parameter of one of the third tunable RF filter path **110** and the fourth tunable RF filter path **112** is a center frequency, and the first filter parameter of another of the third tunable RF filter path **110** and the fourth tunable RF filter path **112** is a break frequency.

In an additional embodiment of the third tunable RF filter path **110** and the fourth tunable RF filter path **112**, one of the third tunable RF filter path **110** and the fourth tunable RF filter path **112** is a highpass filter, and another of the third tunable RF filter path **110** and the fourth tunable RF filter path **112** is a bandpass filter. As such, the first filter parameter of one of the third tunable RF filter path **110** and the fourth tunable RF filter path **112** is a center frequency, and the first filter parameter of another of the third tunable RF filter path **110** and the fourth tunable RF filter path **112** is a break frequency.

In one embodiment of the RF communications circuitry **54**, the RF communications circuitry **54** is a CA system, such that the third tunable RF filter path **110**, which is the first RF receive filter, and the fourth tunable RF filter path **112**, which is the second RF receive filter, simultaneously receive and filter the first upstream RF receive signal RU**1** and the second upstream RF receive signal RU**2**, respectively, via the first common connection node **74**. As such, the first RF filter structure **60** functions as a de-multiplexer using the third tunable RF filter path **110** and the fourth tunable RF filter path **112**. In one embodiment of the first RF filter structure **60**, the first RF filter structure **60** further functions as a multiplexer using the first tunable RF filter path **66** and the second tunable RF filter path **68**. In this regard, each of the first upstream RF receive signal RU**1** and the second upstream RF receive signal RU**2** has a unique carrier frequency.

In another embodiment of the RF communications circuitry **54**, the RF communications circuitry **54** is a receive communications system, such that the third tunable RF filter path **110**, which is the first RF receive filter, and the fourth tunable RF filter path **112**, which is the second RF receive filter, do not simultaneously receive and filter the first upstream RF receive signal RU**1** and the second upstream RF receive signal RU**2**, respectively. As such, the first upstream RF receive signal RU**1** and the second upstream RF receive signal RU**2** are nonsimultaneous signals. Each of the first upstream RF receive signal RU**1** and the second upstream RF receive signal RU**2** may be associated with a unique RF communications band.

FIG. **12** shows the RF communications circuitry **54** according to an alternate embodiment of the RF communications circuitry **54**. The RF communications circuitry **54** illustrated in FIG. **12** is similar to the RF communications circuitry **54** illustrated in FIG. **11**, except the RF communications circuitry **54** illustrated in FIG. **12** further includes the second RF antenna **32**. Additionally, the RF front-end circuitry **58** further includes a second common connection node **118** and a second RF filter structure **120**. The third tunable RF filter path **110** and the fourth tunable RF filter path **112** are included in the second RF filter structure **120** instead of being included in the first RF filter structure **60**. Instead of being coupled to the first common connection node **74**, the third tunable RF filter path **110** and the fourth tunable RF filter path **112** are coupled to the second common connection node **118**. In one embodiment of the third tunable RF filter path **110** and the fourth tunable RF filter path **112**, the third tunable RF filter path **110** and the fourth tunable RF filter path **112** are directly coupled to the second common connection node **118**. In one embodiment of the RF communications circuitry **54**, the second RF antenna **32** is coupled to the second common connection node **118**.

FIG. **13** shows the RF communications circuitry **54** according to an additional embodiment of the RF communications circuitry **54**. The RF communications circuitry **54** illustrated in FIG. **13** is similar to the RF communications circuitry **54** illustrated in FIG. **12**, except in the RF communications circuitry **54** illustrated in FIG. **13**, the RF front-end control circuitry **98** provides a front-end status signal FES to the RF system control circuitry **56**. Additionally, the RF front-end control circuitry **98** provides a first calibration control signal CCS**1** and up to and including an N^{TH} calibration control signal CCSN to the first RF filter structure **60**. The RF front-end control circuitry **98** provides a P^{TH} calibration control signal CCSP and up to and including an X^{TH} calibration control signal CCSX to the second RF filter structure **120**. Details of the first RF filter structure **60** and the second RF filter structure **120** are not shown to simplify FIG. **13**.

The first RF filter structure **60** provides a first calibration status signal CSS**1** and up to and including a Q^{TH} calibration status signal CSSQ to the RF front-end control circuitry **98**. The second RF filter structure **120** provides an R^{TH} calibration status signal CSSR and up to and including a Y^{TH} calibration status signal CSSY to the RF front-end control circuitry **98**. In an alternate embodiment of the RF front-end circuitry **58**, any or all of the N^{TH} calibration control signal CCSN, the Q^{TH} calibration status signal CSSQ, the X^{TH} calibration control signal CCSX, and the Y^{TH} calibration status signal CSSY are omitted.

In one embodiment of the RF front-end circuitry **58**, the RF front-end circuitry **58** operates in one of a normal operating mode and a calibration mode. During the calibration mode, the RF front-end control circuitry **98** performs a calibration of the first RF filter structure **60**, the second RF filter structure **120**, or both. As such, the RF front-end control circuitry **98** provides any or all of the filter control signals FCS**1**, FCS**2**, FCS**3**, FCS**4** and any or all of the calibration control signals CCS**1**, CCSN, CCSP, CCSX needed for calibration. Further, the RF front-end control circuitry **98** receives any or all of the calibration status signals CSS**1**, CSSQ, CSSR, CSSY needed for calibration.

During the normal operating mode, the RF front-end control circuitry **98** provides any or all of the filter control signals FCS**1**, FCS**2**, FCS**3**, FCS**4** and any or all of the calibration control signals CCS**1**, CCSN, CCSP, CCSX needed for normal operation. Further, the RF front-end control circuitry **98** receives any or all of the calibration status signals CSS**1**, CSSQ, CSSR, CSSY needed for normal operation. Any or all of the calibration control signals CCS**1**, CCSN, CCSP, CCSX may be based on the front-end control signal FEC. The front-end status signal FES may be based on any or all of the calibration status signals CSS**1**, CSSQ, CSSR, CSSY. Further, during the normal operating mode, the RF front-end circuitry **58** processes signals as needed for normal operation. Other embodiments described in the present disclosure may be associated with normal operation.

The RF communications circuitry **54** illustrated in FIG. **13** includes the first RF antenna **16** and the second RF antenna **32**. In general, the RF communications circuitry **54** is a multiple antenna system. A single-input single-output (SISO) antenna system is a system in which RF transmit signals may be transmitted from the first RF antenna **16** and RF receive signals may be received via the second RF antenna **32**. In one embodiment of the RF communications

circuitry **54**, the antenna system in the RF communications circuitry **54** is a SISO antenna system, as illustrated in FIG. **13**.

A single-input multiple-output (SIMO) antenna system is a system in which RF transmit signals may be simultaneously transmitted from the first RF antenna **16** and the second RF antenna **32**, and RF receive signals may be received via the second RF antenna **32**. In an alternate embodiment of the RF communications circuitry **54**, the second RF filter structure **120** is coupled to the RF transmit circuitry **64**, such that the antenna system in the RF communications circuitry **54** is a SIMO antenna system.

A multiple-input single-output (MISO) antenna system is a system in which RF transmit signals may be transmitted from the first RF antenna **16**, and RF receive signals may be simultaneously received via the first RF antenna **16** and the second RF antenna **32**. In an additional embodiment of the RF communications circuitry **54**, the first RF filter structure **60** is coupled to the RF receive circuitry **62**, such that the antenna system in the RF communications circuitry **54** is a MISO antenna system.

A multiple-input multiple-output (MIMO) antenna system is a system in which RF transmit signals may be simultaneously transmitted from the first RF antenna **16** and the second RF antenna **32**, and RF receive signals may be simultaneously received via the first RF antenna **16** and the second RF antenna **32**. In another embodiment of the RF communications circuitry **54**, the second RF filter structure **120** is coupled to the RF transmit circuitry **64** and the first RF filter structure **60** is coupled to the RF receive circuitry **62**, such that the antenna system in the RF communications circuitry **54** is a MIMO antenna system.

FIG. **14** shows the RF communications circuitry **54** according to another embodiment of the RF communications circuitry **54**. The RF communications circuitry **54** illustrated in FIG. **14** is similar to the RF communications circuitry **54** illustrated in FIG. **11**, except in the RF communications circuitry **54** illustrated in FIG. **14**, the first RF filter structure **60** further includes a fifth tunable RF filter path **122** and a sixth tunable RF filter path **124**, and the RF front-end circuitry **58** further includes a fifth connection node **126** and a sixth connection node **128**. Additionally, the RF front-end control circuitry **98** shown in FIG. **11** is not shown in FIG. **14** to simplify FIG. **14**.

In one embodiment of the fifth tunable RF filter path **122**, the fifth tunable RF filter path **122** includes a fifth pair (not shown) of weakly coupled resonators. In one embodiment of the sixth tunable RF filter path **124**, the sixth tunable RF filter path **124** includes a sixth pair (not shown) of weakly coupled resonators.

In one embodiment of the fifth tunable RF filter path **122** and the sixth tunable RF filter path **124**, the fifth tunable RF filter path **122** is directly coupled between the first common connection node **74** and the fifth connection node **126**, and the sixth tunable RF filter path **124** is directly coupled between the sixth connection node **128** and the first common connection node **74**. In another embodiment of the RF communications circuitry **54**, the first RF antenna **16** is omitted. Additionally, the RF receive circuitry **62** is further coupled between the sixth connection node **128** and the RF system control circuitry **56**, and the RF transmit circuitry **64** is further coupled between the fifth connection node **126** and the RF system control circuitry **56**.

In one embodiment of the RF communications circuitry **54**, the sixth tunable RF filter path **124** is a third RF receive filter, such that the first RF antenna **16** forwards a third received RF signal via the first common connection node **74** to provide a third upstream RF receive signal RU**3** to the sixth tunable RF filter path **124**, which receives and filters the third upstream RF receive signal RU**3** to provide a third filtered RF receive signal RF**3** to the RF receive circuitry **62**, which processes the third filtered RF receive signal RF**3** to provide the third receive signal RX**3** to the RF system control circuitry **56**.

In one embodiment of the RF communications circuitry **54**, the fifth tunable RF filter path **122** is a third RF transmit filter, such that the RF system control circuitry **56** provides a third transmit signal TX**3** to the RF transmit circuitry **64**, which processes the third transmit signal TX**3** to provide a third upstream RF transmit signal TU**3** to the fifth tunable RF filter path **122**. The fifth tunable RF filter path **122** receives and filters the third upstream RF transmit signal TU**3** to provide a third filtered RF transmit signal TF**3**, which is transmitted via the first common connection node **74** by the first RF antenna **16**.

In one embodiment of the RF communications circuitry **54**, the first tunable RF filter path **66**, the second tunable RF filter path **68**, the third tunable RF filter path **110**, the fourth tunable RF filter path **112**, the fifth tunable RF filter path **122**, and the sixth tunable RF filter path **124** do not significantly load one another at frequencies of interest. Therefore, antenna switching circuitry **34**, **42** (FIG. **3**) may be avoided. As such, by directly coupling the first tunable RF filter path **66**, the second tunable RF filter path **68**, the third tunable RF filter path **110**, the fourth tunable RF filter path **112**, the fifth tunable RF filter path **122** and the sixth tunable RF filter path **124** to the first common connection node **74**; front-end RF switching elements may be avoided, thereby reducing cost, size, and non-linearity; and increasing efficiency and flexibility of the RF communications circuitry **54**.

In one embodiment of the RF communications circuitry **54**, the RF communications circuitry **54** is an FDD communications system, such that each of the first tunable RF filter path **66**, the second tunable RF filter path **68**, the third tunable RF filter path **110**, the fourth tunable RF filter path **112**, the fifth tunable RF filter path **122**, and the sixth tunable RF filter path **124** is a bandpass filter having a unique center frequency. As such, in one embodiment of the RF system control circuitry **56**, the first filter parameter of each of the first tunable RF filter path **66**, the second tunable RF filter path **68**, the third tunable RF filter path **110**, the fourth tunable RF filter path **112**, the fifth tunable RF filter path **122**, and the sixth tunable RF filter path **124** is a unique center frequency.

FIG. **15** shows the RF communications circuitry **54** according to a further embodiment of the RF communications circuitry **54**. The RF communications circuitry **54** illustrated in FIG. **15** is similar to the RF communications circuitry **54** illustrated in FIG. **4**, except in the RF communications circuitry **54** illustrated in FIG. **15**, the RF front-end circuitry **58** further includes an RF antenna switch **130** and the third connection node **114**. Additionally, the first RF filter structure **60** further includes the third tunable RF filter path **110**. Instead of the first RF antenna **16** being directly coupled to the first common connection node **74**, as illustrated in FIG. **4**, the RF antenna switch **130** is coupled between the first RF antenna **16** and the first common connection node **74**. As such, the first common connection node **74** is coupled to the first RF antenna **16** via the RF antenna switch **130**. In this regard, the RF communications circuitry **54** is a hybrid RF communications system.

The RF antenna switch **130** has an antenna switch common connection node **132**, an antenna switch first connection node **134**, an antenna switch second connection node

136, and an antenna switch third connection node 138. The antenna switch common connection node 132 is coupled to the first RF antenna 16. In one embodiment of the RF antenna switch 130, the antenna switch common connection node 132 is directly coupled to the first RF antenna 16. The antenna switch first connection node 134 is coupled to the first common connection node 74. In one embodiment of the RF antenna switch 130, the antenna switch first connection node 134 is directly coupled to the first common connection node 74. The antenna switch second connection node 136 may be coupled to other circuitry (not shown). The antenna switch third connection node 138 may be coupled to other circuitry (not shown). In another embodiment of the RF antenna switch 130, the antenna switch third connection node 138 is omitted. In a further embodiment of the RF antenna switch 130, the RF antenna switch 130 has at least one additional connection node.

The RF system control circuitry 56 provides a switch control signal SCS to the RF antenna switch 130. As such, the RF system control circuitry 56 selects one of the antenna switch first connection node 134, the antenna switch second connection node 136, and the antenna switch third connection node 138 to be coupled to the antenna switch common connection node 132 using the switch control signal SCS.

The third tunable RF filter path 110 is directly coupled between the first common connection node 74 and the third connection node 114. In one embodiment of the RF communications circuitry 54, the third tunable RF filter path 110 is a second RF receive filter, such that the first RF antenna 16 forwards a received RF signal via the RF antenna switch 130 and the first common connection node 74 to provide the second upstream RF receive signal RU2 to the third tunable RF filter path 110, which receives and filters the second upstream RF receive signal RU2 to provide the second filtered RF receive signal RF2 to the RF receive circuitry 62. The RF receive circuitry 62 processes the second filtered RF receive signal RF2 to provide a second receive signal RX2 to the RF system control circuitry 56.

The RF system control circuitry 56 further provides the third filter control signal FCS3. As such, in one embodiment of the RF communications circuitry 54, the RF system control circuitry 56 tunes a first filter parameter of the third tunable RF filter path 110 using the third filter control signal FCS3. In one embodiment of the RF communications circuitry 54, the RF communications circuitry 54 uses the second tunable RF filter path 68 and the third tunable RF filter path 110 to provide receive CA. In an alternate embodiment of the RF communications circuitry 54, tunable RF filters allow for sharing a signal path to provide both an FDD signal path and a TDD signal path, thereby lowering front-end complexity.

FIG. 16 shows the RF communications circuitry 54 according to one embodiment of the RF communications circuitry 54. The RF communications circuitry 54 illustrated in FIG. 16 is similar to the RF communications circuitry 54 illustrated in FIG. 15, except in the RF communications circuitry 54 illustrated in FIG. 16, the third tunable RF filter path 110 is omitted. Additionally, in one embodiment of the RF communications circuitry 54, the RF receive circuitry 62, the RF transmit circuitry 64, and the first RF filter structure 60 are all broadband devices. As such, the RF communications circuitry 54 is broadband circuitry capable of processing RF signals having wide frequency ranges.

FIG. 17 shows the RF communications circuitry 54 according to an alternate embodiment of the RF communications circuitry 54. The RF communications circuitry 54 illustrated in FIG. 17 is similar to the RF communications circuitry 54 illustrated in FIG. 16, except in the RF communications circuitry 54 illustrated in FIG. 17, the RF receive circuitry 62 is omitted and the RF front-end circuitry 58 further includes a first RF front-end circuit 140, a second RF front-end circuit 142, and a third RF front-end circuit 144.

The first RF front-end circuit 140 includes the RF transmit circuitry 64. The second RF front-end circuit 142 includes the first RF filter structure 60, the first connection node 70, the second connection node 72, and the first common connection node 74. The third RF front-end circuit 144 includes the RF antenna switch 130. In one embodiment of the first RF front-end circuit 140, the first RF front-end circuit 140 is a first RF front-end integrated circuit (IC). In one embodiment of the second RF front-end circuit 142, the second RF front-end circuit 142 is a second RF front-end IC. In one embodiment of the third RF front-end circuit 144, the third RF front-end circuit 144 is a third RF front-end IC.

FIG. 18 shows the RF communications circuitry 54 according to an additional embodiment of the RF communications circuitry 54. The RF communications circuitry 54 illustrated in FIG. 18 is similar to the RF communications circuitry 54 illustrated in FIG. 16, except in the RF communications circuitry 54 illustrated in FIG. 18, the RF receive circuitry 62 is omitted and the RF front-end circuitry 58 further includes the first RF front-end circuit 140 and the second RF front-end circuit 142.

The first RF front-end circuit 140 includes the RF transmit circuitry 64. The second RF front-end circuit 142 includes the first RF filter structure 60, the RF antenna switch 130, the first connection node 70, the second connection node 72, and the first common connection node 74. In one embodiment of the first RF front-end circuit 140, the first RF front-end circuit 140 is the first RF front-end IC. In one embodiment of the second RF front-end circuit 142, the second RF front-end circuit 142 is the second RF front-end IC.

FIG. 19 shows the RF communications circuitry 54 according to another embodiment of the RF communications circuitry 54. The RF communications circuitry 54 illustrated in FIG. 19 is similar to the RF communications circuitry 54 illustrated in FIG. 16, except in the RF communications circuitry 54 illustrated in FIG. 19, the RF receive circuitry 62 is omitted and the RF front-end circuitry 58 further includes the first RF front-end circuit 140.

The first RF front-end circuit 140 includes the RF transmit circuitry 64, the first RF filter structure 60, the RF antenna switch 130, the first connection node 70, the second connection node 72, and the first common connection node 74. In one embodiment of the first RF front-end circuit 140, the first RF front-end circuit 140 is the first RF front-end IC.

FIG. 20 shows the RF communications circuitry 54 according to a further embodiment of the RF communications circuitry 54. The RF communications circuitry 54 illustrated in FIG. 20 is a TDD system, which is capable of transmitting and receiving RF signals, but not simultaneously. As such, the RF communications circuitry 54 illustrated in FIG. 20 is similar to the RF communications circuitry 54 illustrated in FIG. 4, except in the RF communications circuitry 54 illustrated in FIG. 20, the second tunable RF filter path 68 and the second connection node 72 are omitted, and the RF front-end circuitry 58 further includes an RF transmit/receive switch 146 coupled between the first tunable RF filter path 66 and the RF receive circuitry 62, and further coupled between the first tunable RF filter path 66 and the RF transmit circuitry 64.

Since the RF communications circuitry 54 does not simultaneously transmit and receive RF signals, the first tunable

RF filter path **66** provides front-end transmit filtering when the RF communications circuitry **54** is transmitting RF signals and the first tunable RF filter path **66** provides front-end receive filtering when the RF communications circuitry **54** is receiving RF signals. In this regard, the first tunable RF filter path **66** processes half-duplex signals.

The RF transmit/receive switch **146** has a transmit/receive switch common connection node **148**, a transmit/receive switch first connection node **150**, and a transmit/receive switch second connection node **152**. The RF receive circuitry **62** is coupled between the RF system control circuitry **56** and the transmit/receive switch second connection node **152**. The RF transmit circuitry **64** is coupled between the RF system control circuitry **56** and the transmit/receive switch first connection node **150**. The first connection node **70** is coupled to the transmit/receive switch common connection node **148**.

The RF system control circuitry **56** provides a switch control signal SCS to the RF transmit/receive switch **146**. As such, the RF system control circuitry **56** selects either the transmit/receive switch first connection node **150** or the transmit/receive switch second connection node **152** to be coupled to the transmit/receive switch common connection node **148** using the switch control signal SCS. Therefore, when the RF communications circuitry **54** is transmitting RF signals, the RF transmit circuitry **64** is coupled to the first tunable RF filter path **66** and the RF receive circuitry **62** is not coupled to the first tunable RF filter path **66**. Conversely, when the RF communications circuitry **54** is receiving RF signals, the RF receive circuitry **62** is coupled to the first tunable RF filter path **66** and the RF transmit circuitry **64** is not coupled to the first tunable RF filter path **66**.

FIG. **21** illustrates an exemplary embodiment of the first RF filter structure **60**. The first RF filter structure **60** includes a plurality of resonators (referred to generically as elements R and specifically as elements R(i,j), where an integer i indicates a row position and an integer j indicates a column position, where $1 \leq i \leq M$, $1 \leq j \leq N$ and M is any integer greater than 1 and N is any integer greater than to 1. It should be noted that in alternative embodiments the number of resonators R in each row and column may be the same or different). The first tunable RF filter path **66** includes row 1 of weakly coupled resonators R(**1**,**1**), R(**1**,**2**) through (R(**1**,N). All of the weakly coupled resonators R(**1**,**1**), R(**1**,**2**) through (R(**1**,N) are weakly coupled to one another. Furthermore, the first tunable RF filter path **66** is electrically connected between terminal **200** and terminal **202**. In this manner, the first tunable RF filter path **66** is configured to receive RF signals and output filtered RF signals. The second tunable RF filter path **68** includes row M of weakly coupled resonators R(M,**1**), R(M,**2**) through R(M,N). All of the weakly coupled resonators R(M,**1**), R(M,**2**) through R(M,N) are weakly coupled to one another. Furthermore, the second tunable RF filter path **68** is electrically connected between terminal **204** and terminal **206**. In this manner, the second tunable RF filter path **68** is configured to receive RF signals and output filtered RF signals. It should be noted that the first RF filter structure **60** may include any number of tunable RF filter paths, such as, for example, the third tunable RF filter path **110**, the fourth tunable RF filter path **112**, the fifth tunable RF filter path **122**, and the sixth tunable RF filter path **124**, described above with respect to FIGS. **11-14**. Each of the resonators R may be a tunable resonator, which allows for a resonant frequency of each of the resonators R to be varied to along a frequency range. In some embodiments, not all of the couplings between the resonators R are weak. A hybrid architecture having at least one pair of weakly coupled resonators R and strongly or moderately coupled resonators R is also possible.

Cross-coupling capacitive structures C are electrically connected to and between the resonators R. In this embodiment, each of the cross-coupling capacitive structures C is a variable cross-coupling capacitive structure, such as a varactor or an array of capacitors. To be independent, the magnetic couplings may be negligible. Alternatively, the cross-coupling capacitive structures C may simply be provided by a capacitor with a fixed capacitance. With regard to the exemplary embodiment shown in FIG. **21**, the tunable RF filter paths of the first RF filter structure **60** are independent of one another. As such, the first tunable RF filter path **66** and the second tunable RF filter path **68** are independent of one another and thus do not have cross-coupling capacitive structures C between their resonators. Thus, in this embodiment, the cross-coupling capacitive structures C do not connect any of the weakly coupled resonators R(**1**,**1**), R(**1**,**2**) through (R(**1**,N) to any of the weakly coupled resonators R(M,**1**), R(M,**2**) through (R(M,N). This provides increased isolation between the first tunable RF filter path **66** and the second tunable RF filter path **68**. In general, energy transfer between two weakly coupled resonators R in the first tunable RF filter path **66** and the second tunable RF filter path **68** may be provided by multiple energy transfer components. For example, energy may be transferred between the resonators R only through mutual magnetic coupling, only through mutual electric coupling, or through both mutual electric coupling and mutual magnetic coupling. Ideally, all of the mutual coupling coefficients are provided as designed, but in practice, the mutual coupling coefficients also be the result of parasitics. The inductors of the resonators R may also have magnetic coupling between them. A total coupling between the resonators R is given by the sum of magnetic and electric coupling.

In order to provide the transfer functions of the tunable RF filter paths **66**, **68** with high out-of-band attenuation and a relatively low filter order, the tunable RF filter paths **66**, **68** are configured to adjust notches in the transfer function, which are provided by the resonators R within the tunable RF filter paths **66**, **68**. The notches can be provided using parallel tanks connected in series or in shunt along a signal path of the first tunable RF filter path **66**. To provide the notches, the parallel tanks operate approximately as an open circuit or as short circuits at certain frequencies. The notches can also be provided using multi-signal path cancellation. In this case, the tunable RF filter paths **66**, **68** may be smaller and/or have fewer inductors. To tune the total mutual coupling coefficients between the resonators R towards a desired value, the tunable RF filter paths **66**, **68** are configured to vary variable electric coupling coefficients so that parasitic couplings between the resonators R in the tunable RF filter paths **66**, **68** are absorbed into a desired frequency transfer function.

FIG. **22** illustrates an exemplary embodiment of the first tunable RF filter path **66** in the first RF filter structure **60** shown in FIG. **21**. While the exemplary embodiment shown in FIG. **22** is of the first tunable RF filter path **66**, any of the tunable RF filter paths shown in the first RF filter structure **60** of FIG. **21** may be arranged in accordance with the exemplary embodiment shown in FIG. **22**. The first tunable RF filter path **66** shown in FIG. **22** includes an embodiment of the resonator R(**1**,**1**) and an embodiment of the resonator R(**1**,**2**). The resonator R(**1**,**1**) and the resonator R(**1**,**2**) are weakly coupled to one another. More specifically, the resonator R(**1**,**1**) includes an inductor **208** and a capacitive

structure **210**. The resonator R(**1**,**2**) includes an inductor **212**, a capacitive structure **214**, and a capacitive structure **216**.

The resonator R(**1**,**1**) and the resonator R(**1**,**2**) are a pair of weakly coupled resonators. The resonator R(**1**,**1**) and the resonator R(**1**,**2**) are weakly coupled by providing the inductor **208** and the inductor **212** such that the inductor **208** and the inductor **212** are weakly magnetically coupled. Although the resonator R(**1**,**1**) and the resonator R(**1**,**2**) are weakly coupled, the inductor **212** has a maximum lateral width and a displacement between the inductor **208** and the inductor **212** is less than or equal to half the maximum lateral width of the inductor **212**. As such, the inductor **208** and the inductor **212** are relatively close to one another. The displacement between the inductor **208** and the inductor **212** may be measured from a geometric centroid of the inductor **208** to a geometric centroid of the inductor **212**. The maximum lateral width may be a maximum dimension of the inductor **212** along a plane defined by its largest winding. The weak coupling between the inductor **208** and the inductor **212** is obtained through topological techniques. For example, the inductor **208** and the inductor **212** may be fully or partially aligned, where winding(s) of the inductor **208** and winding(s) of the inductor **212** are configured to provide weak coupling through cancellation. Alternatively or additionally, a plane defining an orientation of the winding(s) of the inductor **208** and a plane defining an orientation of the winding(s) of the inductor **212** may be fully or partially orthogonal to one another. Some of the magnetic couplings between the resonators R can be unidirectional (passive or active). This can significantly improve isolation (e.g., transmit and receive isolation in duplexers).

To maximize the quality (Q) factor of the tunable RF filter paths **66** through **68**, most of the total mutual coupling should be realized magnetically, and only fine-tuning is provided electrically. This also helps to reduce common-mode signal transfer in the differential resonators and thus keeps the Q factor high. While the magnetic coupling can be adjusted only statically, with a new layout design, the electric coupling can be tuned on the fly (after fabrication). The filter characteristics (e.g., bias network structure, resonator capacitance) can be adjusted based on given coupling coefficients to maximize filter performance.

To provide a tuning range to tune a transfer function of the first tunable RF filter path **66** and provide a fast roll-off from a low-frequency side to a high-frequency side of the transfer function, the first tunable RF filter path **66** is configured to change a sign of a total mutual coupling coefficient between the resonator R(**1**,**1**) and the resonator R(**1**,**2**). Accordingly, the first tunable RF filter path **66** includes a cross-coupling capacitive structure C(P**1**) and a cross-coupling capacitive structure C(N**1**). The cross-coupling capacitive structure C(P**1**) and the cross-coupling capacitive structure C(N**1**) are embodiments of the cross-coupling capacitive structures C described above with regard to FIG. **21**. As shown in FIG. **22**, the cross-coupling capacitive structure C(P**1**) is electrically connected between the resonator R(**1**,**1**) and the resonator R(**1**,**2**) so as to provide a positive coupling coefficient between the resonator R(**1**,**1**) and the resonator R(**1**,**2**). The cross-coupling capacitive structure C(P**1**) is a variable cross-coupling capacitive structure configured to vary the positive coupling coefficient provided between the resonator R(**1**,**1**) and the resonator R(**1**,**2**). The cross-coupling capacitive structure C(N**1**) is electrically connected between the resonator R(**1**,**1**) and the resonator R(**1**,**2**) so as to provide a negative coupling coefficient between the resonator R(**1**,**1**) and the resonator R(**1**,**2**). The cross-coupling capacitive structure C(N**1**) is a variable cross-coupling capacitive structure configured to vary the negative coupling coefficient provided between the resonator R(**1**,**1**) and the resonator R(**1**,**2**). The arrangement of the cross-coupling capacitive structure C(P**1**) and the cross-coupling capacitive structure C(N**1**) shown in FIG. **22** is a V-bridge structure. In alternative embodiments, some or all of the cross-coupling capacitive structures is fixed (not variable).

In the resonator R(**1**,**1**), the inductor **208** and the capacitive structure **210** are electrically connected in parallel. More specifically, the inductor **208** has an end **217** and an end **218**, which are disposed opposite to one another. The ends **217**, **218** are each electrically connected to the capacitive structure **210**, which is grounded. Thus, the resonator R(**1**,**1**) is a single-ended resonator. On the other hand, the inductor **212** is electrically connected between the capacitive structure **214** and the capacitive structure **216**. More specifically, the inductor **212** has an end **220** and an end **222**, which are disposed opposite to one another. The end **220** is electrically connected to the capacitive structure **214** and the end **222** is electrically connected to the capacitive structure **216**. Both the capacitive structure **214** and the capacitive structure **216** are grounded. Thus, the resonator R(**1**,**2**) is a differential resonator. In an alternative, an inductor with a center tap can be used. The tap can be connected to ground and only a single capacitive structure can be used. In yet another embodiment, both an inductor and a capacitive structure may have a center tap that is grounded. In still another embodiment, neither the inductor nor the capacitive structure may have a grounded center tap.

The inductor **208** is magnetically coupled to the inductor **212** such that an RF signal received at the end **217** of the inductor **208** with a voltage polarity (i.e., either a positive voltage polarity or a negative voltage polarity) results in a filtered RF signal being transmitted out the end **220** of the inductor **212** with the same voltage polarity. Also, the inductor **212** is magnetically coupled to the inductor **208** such that an RF signal received at the end **220** of the inductor **212** with a voltage polarity (i.e., either a positive voltage polarity or a negative voltage polarity) results in a filtered RF signal being transmitted out the end **217** of the inductor **208** with the same voltage polarity. This is indicated in FIG. **22** by the dot convention where a dot is placed at the end **217** of the inductor **208** and a dot is placed at the end **220** of the inductor **212**. By using two independent and adjustable coupling coefficients (i.e., the positive coupling coefficient and the negative coupling coefficient) with the resonator R(**1**,**2**) (i.e., the differential resonator), the transfer function of the first tunable RF filter path **66** is provided so as to be fully adjustable. More specifically, the inductors **208**, **212** may be magnetically coupled so as to have a low magnetic coupling coefficient through field cancellation, with the variable positive coupling coefficient and the variable negative coupling coefficient. In this case, the inductor **208** and the inductor **212** are arranged such that a mutual magnetic coupling between the inductor **208** and the inductor **212** cancel. Alternatively, the inductor **208** and the inductor **212** are arranged such that the inductor **212** reduces a mutual magnetic coupling coefficient of the inductor **208**. With respect to the magnetic coupling coefficient, the variable positive coupling coefficient is a variable positive electric coupling coefficient and the variable negative coupling coefficient is a variable negative electric coupling coefficient. The variable positive electric coupling coefficient and the variable negative electric coupling coefficient oppose each other to create a tunable filter characteristic.

The resonator R(1,2) is operably associated with the resonator R(1,1) such that an energy transfer factor between the resonator R(1,1) and the resonator R(1,2) is less than 10%. A total mutual coupling between the resonator R(1,1) and the resonator R(1,2) is provided by a sum total of the mutual magnetic factor between the resonator R(1,1) and the resonator R(1,2) and the mutual electric coupling coefficients between the resonator R(1,1) and the resonator R(1,2). In this embodiment, the mutual magnetic coupling coefficient between the inductor **208** and the inductor **212** is a fixed mutual magnetic coupling coefficient. Although embodiments of the resonators R(1,1), R(1,2) may be provided so as to provide a variable magnetic coupling coefficient between the resonators R(1,1), R(1,2), embodiments of the resonators R(1,1), R(1,2) that provide variable magnetic couplings can be costly and difficult to realize. However, providing variable electric coupling coefficients (i.e., the variable positive electric coupling coefficient and the variable electric negative coupling coefficient) is easier and more economical. Thus, using the cross-coupling capacitive structure C(P1) and the cross-coupling capacitive structure C(N1) to provide the variable positive electric coupling coefficient and the variable electric negative coupling coefficient is an economical technique for providing a tunable filter characteristic between the resonators R(1,1), R(1,2). Furthermore, since the mutual magnetic coupling coefficient between the inductor **208** and the inductor **212** is fixed, the first tunable RF filter path **66** has lower insertion losses.

In the embodiment shown in FIG. **22**, the inductor **208** and the **212** inductor are the same size. Alternatively, the inductor **208** and the inductor **212** may be different sizes. For example, the inductor **212** may be smaller than the inductor **208**. By determining a distance between the inductor **208** and the inductor **212**, the magnetic coupling coefficient between the inductor **208** and the inductor **212** can be set. With regard to the inductors **208**, **212** shown in FIG. **22**, the inductor **208** may be a folded inductor configured to generate a first confined magnetic field, while the inductor **212** may be a folded inductor configured to generate a second confined magnetic field. Magnetic field lines of the first confined magnetic field and of the second confined magnetic field that are external to the inductor **208** and inductor **212** are cancelled by opposing magnetic field lines in all directions. When the inductor **208** and the inductor **212** are folded inductors, the folded inductors can be stacked. This allows building the first tunable RF filter path **66** such that several inductors **208**, **212** are stacked. Furthermore, this arrangement allows for a specially sized interconnect structure that electrically connects the inductors **208**, **212** to the capacitive structure **210**, the capacitive structure **214**, the capacitive structure **216**, the cross-coupling capacitive structure C(P1), and the cross-coupling capacitive structure C(N1). The specially sized interconnect increases the Q factor of the capacitive structure **210**, the capacitive structure **214**, the capacitive structure **216**, the cross-coupling capacitive structure C(P1), and the cross-coupling capacitive structure C(N1), and allows for precise control of their variable capacitances. Weakly coupled filters can also be realized with planar field cancellation structures.

FIG. **23** illustrates an exemplary embodiment of the first tunable RF filter path **66** in the first RF filter structure **60** shown in FIG. **21**. While the exemplary embodiment shown in FIG. **23** is of the first tunable RF filter path **66**, any of the tunable RF filter paths shown in the first RF filter structure **60** of FIG. **21** may be arranged in accordance with the exemplary embodiment shown in FIG. **23**. The first tunable RF filter path **66** shown in FIG. **23** includes an embodiment of the resonator R(1,1) and an embodiment of the resonator R(1,2). The resonator R(1,1) and the resonator R(1,2) are weakly coupled to one another. The embodiment of the resonator R(1,2) is the same as the embodiment of the resonator R(1,2) shown in FIG. **22**. Thus, the resonator R(1,2) shown in FIG. **23** is a differential resonator that includes the inductor **212**, the capacitive structure **214**, and the capacitive structure **216**. Additionally, like the embodiment of the resonator R(1,1) shown in FIG. **22**, the embodiment of the resonator R(1,1) shown in FIG. **23** includes the inductor **208** and the capacitive structure **210**. However, in this embodiment, the resonator R(1,1) shown in FIG. **23** is a differential resonator and further includes a capacitive structure **224**. More specifically, the end **217** of the inductor **208** is electrically connected to the capacitive structure **210** and the end **218** of the inductor **208** is electrically connected to the capacitive structure **224**. Both the capacitive structure **210** and the capacitive structure **224** are grounded. Like the capacitive structure **210**, the capacitive structure **224** is also a variable capacitive structure, such as a programmable array of capacitors or a varactor. Alternatively, a center tap of an inductor may be grounded. In yet another embodiment, the inductor and a capacitive structure may be RF floating (a low-resistance connection to ground).

The resonator R(1,1) and the resonator R(1,2) are a pair of weakly coupled resonators. Like the first tunable RF filter path **66** shown in FIG. **22**, the resonator R(1,1) and the resonator R(1,2) are weakly coupled by providing the inductor **208** and the inductor **212** such that the inductor **208** and the inductor **212** are weakly coupled. Thus, the inductor **208** and the inductor **212** may have a magnetic coupling coefficient that is less than or equal to approximately 0.3. Although the resonator R(1,1) and the resonator R(1,2) are weakly coupled, a displacement between the inductor **208** and the inductor **212** is less than or equal to half the maximum lateral width of the inductor **212**. As such, the inductor **208** and the inductor **212** are relatively close to one another. The displacement between the inductor **208** and the inductor **212** may be measured from a geometric centroid of the inductor **208** to a geometric centroid of the inductor **212**. The maximum lateral width may be a maximum dimension of the inductor **212** along a plane defined by its largest winding.

The weak coupling between the inductor **208** and the inductor **212** is obtained through topological techniques. For example, the inductor **208** and the inductor **212** may be fully or partially aligned, where winding(s) of the inductor **208** and winding(s) of the inductor **212** are configured to provide weak coupling through cancellation. Alternatively or additionally, a plane defining an orientation of the windings of the inductor **208** and a plane defining an orientation of the windings of the inductor **212** may be fully or partially orthogonal to one another.

The resonator R(1,2) is operably associated with the resonator R(1,1) such that an energy transfer factor between the resonator R(1,1) and the resonator R(1,2) is less than 10%. To provide a tuning range to tune a transfer function of the first tunable RF filter path **66** such to provide a fast roll-off from a low-frequency side to a high-frequency side requires changing a sign of the total mutual coupling coefficient between the resonator R(1,1) and the resonator R(1,2). Like the embodiment of the first tunable RF filter path **66** shown in FIG. **22**, the first tunable RF filter path **66** shown in FIG. **23** includes the cross-coupling capacitive structure C(P1) and the cross-coupling capacitive structure C(N1). The cross-coupling capacitive structure C(P1) and the cross-coupling capacitive structure C(N1) are arranged in the same

manner described above with respect to FIG. **22**. However, in this embodiment, the first tunable RF filter path **66** shown in FIG. **23** also includes a cross-coupling capacitive structure C(P**2**) and a cross-coupling capacitive structure C(N**2**). The cross-coupling capacitive structure C(P**2**) and the cross-coupling capacitive structure C(N**2**) are also embodiments of the cross-coupling capacitive structures C described above with regard to FIG. **21**.

As described above with respect to FIG. **22**, the cross-coupling capacitive structure C(P**1**) is electrically connected between the resonator R(**1**,**1**) and the resonator R(**1**,**2**) so as to provide the positive coupling coefficient (i.e., the variable positive electric coupling coefficient) between the resonator R(**1**,**1**) and the resonator R(**1**,**2**). Also as described above with respect to FIG. **22**, the cross-coupling capacitive structure C(N**1**) is electrically connected between the resonator R(**1**,**1**) and the resonator R(**1**,**2**) so as to provide the negative coupling coefficient (i.e., the variable negative electric coupling coefficient) between the resonator R(**1**,**1**) and the resonator R(**1**,**2**). With regard to the cross-coupling capacitive structure C(P**2**), the cross-coupling capacitive structure C(P**2**) is electrically connected between the resonator R(**1**,**1**) and the resonator R(**1**,**2**) so as to provide another positive coupling coefficient (i.e., another variable positive electric coupling coefficient) between the resonator R(**1**,**1**) and the resonator R(**1**,**2**). In this embodiment, the cross-coupling capacitive structure C(P**2**) is electrically connected between the end **218** of the inductor **208** and the end **222** of the inductor **212**. The cross-coupling capacitive structure C(P**2**) is a variable cross-coupling capacitive structure configured to vary the other positive coupling coefficient (i.e., the other variable positive electric coupling coefficient) provided between the resonator R(**1**,**1**) and the resonator R(**1**,**2**). With regard to the cross-coupling capacitive structure C(N**2**), the cross-coupling capacitive structure C(N**2**) is electrically connected between the resonator R(**1**,**1**) and the resonator R(**1**,**2**) so as to provide another negative coupling coefficient (i.e., another variable negative electric coupling coefficient) between the resonator R(**1**,**1**) and the resonator R(**1**,**2**). In this embodiment, the cross-coupling capacitive structure C(N**2**) is electrically connected between the end **218** of the inductor **208** and the end **220** of the inductor **212**. The cross-coupling capacitive structure C(N**2**) is a variable cross-coupling capacitive structure configured to vary the negative coupling coefficient (i.e., the other variable negative electric coupling coefficient) provided between the resonator R(**1**,**1**) and the resonator R(**1**,**2**). The arrangement of the cross-coupling capacitive structure C(P**1**), the cross-coupling capacitive structure C(N**1**), the cross-coupling capacitive structure C(P**2**), and the cross-coupling capacitive structure C(N**2**) shown in FIG. **23** is an X-bridge structure.

As shown in FIG. **23**, the resonator R(**1**,**2**) is operably associated with the resonator R(**1**,**1**) such that an energy transfer factor between the resonator R(**1**,**1**) and the resonator R(**1**,**2**) is less than 10%. The total mutual coupling between the resonator R(**1**,**1**) and the resonator R(**1**,**2**) is provided by a sum total of the mutual magnetic factor between the resonator R(**1**,**1**) and the resonator R(**1**,**2**) and the mutual electric coupling coefficients between the resonator R(**1**,**1**) and the resonator R(**1**,**2**). Thus, in this embodiment, the total mutual coupling between the resonator R(**1**,**1**) and the resonator R(**1**,**2**) is provided by the sum total of the mutual magnetic coupling coefficient, the variable positive electric coupling coefficient provided by the cross-coupling capacitive structure C(P**1**), the variable negative electric coupling coefficient provided by the cross-coupling capacitive structure C(N**1**), the other variable positive electric coupling coefficient provided by the cross-coupling capacitive structure C(P**2**), and the other variable negative electric coupling coefficient provided by the cross-coupling capacitive structure C(N**2**).

FIG. **24** illustrates an exemplary embodiment of the first tunable RF filter path **66** in the first RF filter structure **60** shown in FIG. **21**. While the exemplary embodiment shown in FIG. **24** is of the first tunable RF filter path **66**, any of the tunable RF filter paths shown in the first RF filter structure **60** of FIG. **21** may be arranged in accordance with the exemplary embodiment shown in FIG. **24**. The first tunable RF filter path **66** shown in FIG. **24** includes an embodiment of the resonator R(**1**,**1**) and an embodiment of the resonator R(**1**,**2**). The resonator R(**1**,**1**) and the resonator R(**1**,**2**) are weakly coupled to one another. The embodiment of the resonator R(**1**,**1**) is the same as the embodiment of the resonator R(**1**,**1**) shown in FIG. **22**. Thus, the resonator R(**1**,**1**) shown in FIG. **24** is a single-ended resonator that includes the inductor **208** and the capacitive structure **210**. Additionally, like the embodiment of the resonator R(**1**,**2**) shown in FIG. **22**, the embodiment of the resonator R(**1**,**2**) shown in FIG. **24** includes the inductor **212** and the capacitive structure **214**. However, in this embodiment, the resonator R(**1**,**2**) shown in FIG. **24** is a single-ended resonator. More specifically, the end **220** and the end **222** of the inductor **212** are each electrically connected to the capacitive structure **214**, which is grounded.

The resonator R(**1**,**1**) and the resonator R(**1**,**2**) are a pair of weakly coupled resonators. Like the first tunable RF filter path **66** shown in FIG. **22**, the resonator R(**1**,**1**) and the resonator R(**1**,**2**) are weakly coupled by providing the inductor **208** and the inductor **212** such that the inductor **208** and the inductor **212** are weakly coupled. Thus, the inductor **208** and the inductor **212** may have a magnetic coupling coefficient that is less than or equal to approximately 0.3. Although the resonator R(**1**,**1**) and the resonator R(**1**,**2**) are weakly coupled, the displacement between the inductor **208** and the inductor **212** is less than or equal to half the maximum lateral width of the inductor **212**. As such, the inductor **208** and the inductor **212** are relatively close to one another. The displacement between the inductor **208** and the inductor **212** may be measured from the geometric centroid of the inductor **208** to the geometric centroid of the inductor **212**. The maximum lateral width may be a maximum dimension of the inductor **212** along a plane defined by its largest winding. The weak coupling between the inductor **208** and the inductor **212** is obtained through topological techniques. For example, the inductor **208** and the inductor **212** may be fully or partially aligned, where winding(s) of the inductor **208** and winding(s) of the inductor **212** are configured to provide weak coupling through cancellation. Alternatively or additionally, a plane defining an orientation of the windings of the inductor **208** and a plane defining an orientation of the windings of the inductor **212** may be fully or partially orthogonal to one another.

The resonator R(**1**,**2**) is operably associated with the resonator R(**1**,**1**) such that an energy transfer factor between the resonator R(**1**,**1**) and the resonator R(**1**,**2**) is less than 10%. To provide a tuning range to tune a transfer function of the first tunable RF filter path **66** and provide a fast roll-off from a low-frequency side to a high-frequency side of the transfer function, the first tunable RF filter path **66** is configured to change a sign of a total mutual coupling coefficient between the resonator R(**1**,**1**) and the resonator R(**1**,**2**). However, in this embodiment, the first tunable RF filter path **66** shown in FIG. **24** only includes the cross-coupling capacitive structure C(P**1**), which is electrically

connected between the end **217** of the inductor **208** and the end **220** of the inductor **212**. As discussed above with respect to FIGS. **22** and **23**, the cross-coupling capacitive structure C(P**1**) is a variable cross-coupling capacitive structure configured to vary the positive coupling coefficient (i.e., the variable positive electric coupling coefficient) provided between the resonator R(**1**,**1**) and the resonator R(**1**,**2**). Thus, in order to allow for the sign of the total mutual coupling coefficient between the resonator R(**1**,**1**) and the resonator R(**1**,**2**) to be changed, the inductor **208** and the inductor **212** are arranged so as to provide a fixed negative mutual magnetic coupling coefficient between the inductor **208** of the resonator R(**1**,**1**) and the inductor **212** of the resonator R(**1**,**2**). As such, varying the variable positive electric coupling coefficient allows for the sign of the total mutual coupling coefficient between the resonator R(**1**,**1**) and the resonator R(**1**,**2**) to be changed using only the cross-coupling capacitive structure C(P**1**).

As such, in this embodiment, the inductor **208** is magnetically coupled to the inductor **212** such that an RF signal received at the end **217** of the inductor **208** with a voltage polarity (i.e., either a positive voltage polarity or a negative voltage polarity) results in a filtered RF signal with the same voltage polarity being transmitted out the end **222** of the inductor **212**. In addition, the inductor **212** is magnetically coupled to the inductor **208** such that an RF signal received at the end **222** of the inductor **212** with a voltage polarity (i.e., either a positive voltage polarity or a negative voltage polarity) results in a filtered RF signal with the same voltage polarity being transmitted out the end **217** of the inductor **208**. This is indicated in FIG. **24** by the dot convention where a dot is placed at the end **217** of the inductor **208** and a dot is placed at the end **222** of the inductor **212**. By using the fixed negative mutual magnetic coupling coefficient and the variable positive electric coupling coefficient, the transfer function of the first tunable RF filter path **66** is provided so to be fully adjustable. The arrangement of the cross-coupling capacitive structure C(P**1**) shown in FIG. **24** is a single positive bridge structure.

FIG. **25** illustrates another exemplary embodiment of the first tunable RF filter path **66** in the first RF filter structure **60** shown in FIG. **21**. While the exemplary embodiment shown in FIG. **25** is of the first tunable RF filter path **66**, any of the tunable RF filter paths shown in the first RF filter structure **60** of FIG. **21** may be arranged in accordance with the exemplary embodiment shown in FIG. **25**. The first tunable RF filter path **66** shown in FIG. **25** includes an embodiment of the resonator R(**1**,**1**) and an embodiment of the resonator R(**1**,**2**). The resonator R(**1**,**1**) and the resonator R(**1**,**2**) are weakly coupled to one another. The embodiment of the resonator R(**1**,**1**) is the same as the embodiment of the resonator R(**1**,**1**) shown in FIG. **22**. Thus, the resonator R(**1**,**1**) shown in FIG. **25** is a single-ended resonator that includes the inductor **208** and the capacitive structure **210**, which are arranged in the same manner described above with respect to FIG. **22**. Like the resonator R(**1**,**2**) shown in FIG. **24**, the resonator R(**1**,**2**) shown in FIG. **25** is a single-ended resonator that includes the inductor **212** and the capacitive structure **214**. However, the inductor **208** shown in FIG. **25** is magnetically coupled to the inductor **212** such that an RF signal received at the end **217** of the inductor **208** with a voltage polarity (i.e., either a positive voltage polarity or a negative voltage polarity) results in a filtered RF signal with the same voltage polarity being transmitted out the end **220** of the inductor **212**. Also, the inductor **212** shown in FIG. **25** is magnetically coupled to the inductor **208** such that an RF signal received at the end **220** of the inductor **212** with a voltage polarity (i.e., either a positive voltage polarity or a negative voltage polarity) results in a filtered RF signal with the same voltage polarity being transmitted out the end **217** of the inductor **208**. This is indicated in FIG. **25** by the dot convention where a dot is placed at the end **217** of the inductor **208** and a dot is placed at the end **220** of the inductor **212**. In alternative embodiments, the resonator R(**1**,**2**) is a differential resonator. In yet another alternative embodiment, the resonator R(**1**,**1**) is a single-ended resonator while the resonator R(**1**,**2**) is a differential resonator.

The resonator R(**1**,**1**) and the resonator R(**1**,**2**) are a pair of weakly coupled resonators. Like the first tunable RF filter path **66** shown in FIG. **22**, the resonator R(**1**,**1**) and the resonator R(**1**,**2**) are weakly coupled by providing the inductor **208** and the inductor **212** such that the inductor **208** and the inductor **212** are weakly coupled. Thus, the inductor **208** and the inductor **212** may have a fixed magnetic coupling coefficient that is less than or equal to approximately 0.3. Although the resonator R(**1**,**1**) and the resonator R(**1**,**2**) are weakly coupled, a displacement between the inductor **208** and the inductor **212** is less than or equal to half the maximum lateral width of the inductor **212**. As such, the inductor **208** and the inductor **212** are relatively close to one another. The displacement between the inductor **208** and the inductor **212** may be measured from a geometric centroid of the inductor **208** to a geometric centroid of the inductor **212**. The maximum lateral width may be a maximum dimension of the inductor **212** along a plane defined by its largest winding.

The weak coupling between the inductor **208** and the inductor **212** is obtained through topological techniques. For example, the inductor **208** and the inductor **212** may be fully or partially aligned, where winding(s) of the inductor **208** and winding(s) of the inductor **212** are configured to provide weak coupling through cancellation. Alternatively or additionally, a plane defining an orientation of the windings of the inductor **208** and a plane defining an orientation of the windings of the inductor **212** may be fully or partially orthogonal to one another.

The resonator R(**1**,**2**) is operably associated with the resonator R(**1**,**1**) such that an energy transfer factor between the resonator R(**1**,**1**) and the resonator R(**1**,**2**) is less than 10%. To provide a tuning range to tune the transfer function of the first tunable RF filter path **66** and to provide a fast roll-off from the low-frequency side to the high-frequency side of the transfer function, the first tunable RF filter path **66** is configured to change the sign of the total mutual coupling coefficient between the resonator R(**1**,**1**) and the resonator R(**1**,**2**). In this embodiment, the first tunable RF filter path **66** shown in FIG. **25** includes a cross-coupling capacitive structure C(PH**1**), a cross-coupling capacitive structure (CNH**1**), a cross-coupling capacitive structure C(I**1**), a cross-coupling capacitive structure C(PH**2**), and a cross-coupling capacitive structure C(NH**2**). The cross-coupling capacitive structure C(PH**1**), the cross-coupling capacitive structure (CNH**1**), the cross-coupling capacitive structure C(I**1**), the cross-coupling capacitive structure C(PH**2**), and the cross-coupling capacitive structure C(NH**2**) are also embodiments of the cross-coupling capacitive structures C described above with regard to FIG. **21**.

The cross-coupling capacitive structure C(PH**1**) and the cross-coupling capacitive structure C(NH**1**) are arranged to form a first capacitive voltage divider. The first capacitive voltage divider is electrically connected to the resonator R(**1**,**1**). More specifically, the cross-coupling capacitive structure C(PH**1**) is electrically connected between the end **217** of the inductor **208** and a common connection node H**1**.

The cross-coupling capacitive structure C(NH1) is electrically connected between the end **218** of the inductor **208** and the common connection node H1. Additionally, the cross-coupling capacitive structure C(PH2) and the cross-coupling capacitive structure C(NH2) are arranged to form a second capacitive voltage divider. The second capacitive voltage divider is electrically connected to the resonator R(1,2). More specifically, the cross-coupling capacitive structure C(PH2) is electrically connected between the end **220** of the inductor **212** and a common connection node H2. The cross-coupling capacitive structure C(NH2) is electrically connected between the end **222** of the inductor **212** and the common connection node H2. As shown in FIG. **25**, the cross-coupling capacitive structure C(I1) is electrically connected between the first capacitive voltage divider and the second capacitive voltage divider. More specifically, the cross-coupling capacitive structure C(I1) is electrically connected between the common connection node H1 and the common connection node H2. The arrangement of the cross-coupling capacitive structure C(PH1), the cross-coupling capacitive structure C(NH1), the cross-coupling capacitive structure C(PH2), the cross-coupling capacitive structure C(NH2), and the cross-coupling capacitive structure C(I1) shown in FIG. **25** is an H-bridge structure. In an alternative H-bridge structure, the cross-coupling capacitive structure C(I1) is not provided and instead there is a short between the common connection node H1 and the common connection node H2. In addition, a center tap of the inductor **208** may be grounded and/or the common connection node H1 may be grounded. Finally, a high impedance to ground may be provided at the common connection node H1.

With regard to the first capacitive voltage divider, the cross-coupling capacitive structure C(PH1) is a variable cross-coupling capacitive structure configured to vary a first variable positive electric coupling coefficient provided between the resonator R(1,1) and the common connection node H1. The cross-coupling capacitive structure C(NH1) is a variable cross-coupling capacitive structure configured to vary a first variable negative electric coupling coefficient provided between the resonator R(1,1) and the common connection node H1. Thus, a mutual electric coupling coefficient of the resonator R(1,1) is approximately equal to the first variable positive electric coupling coefficient and the first variable negative electric coupling coefficient.

With regard to the second capacitive voltage divider, the cross-coupling capacitive structure C(PH2) is a variable cross-coupling capacitive structure configured to vary a second variable positive electric coupling coefficient provided between the resonator R(1,2) and the common connection node H2. The cross-coupling capacitive structure C(NH2) is a variable cross-coupling capacitive structure configured to vary a second variable negative electric coupling coefficient provided between the resonator R(1,2) and the common connection node H2. Thus, a mutual electric coupling coefficient of the resonator R(1,2) is approximately equal to the second variable positive electric coupling coefficient and the second variable negative electric coupling coefficient. Furthermore, the cross-coupling capacitive structure C(I1) is a variable cross-coupling capacitive structure configured to vary a first variable intermediate electric coupling coefficient provided between the common connection node H1 and the common connection node H2. The first tunable RF filter path **66** shown in FIG. **25** thus has a total mutual coupling coefficient between the resonator R(1,1) and the resonator R(1,2) equal to the sum total of the mutual magnetic coupling coefficient between the inductor **208** and the inductor **212**, the mutual electric coupling coefficient of the resonator R(1,1), the mutual electric coupling coefficient of the resonator R(1,2), and the first variable intermediate electric coupling coefficient provided between the common connection node H1 and the common connection node H2. In alternative embodiments, cross-coupling capacitive structures with fixed capacitances are provided.

In one embodiment, the cross-coupling capacitive structure C(PH1), the cross-coupling capacitive structure C(NH1), the cross-coupling capacitive structure C(PH2), the cross-coupling capacitive structure C(NH2), and the cross-coupling capacitive structure C(I1) may each be provided as a varactor. However, the cross-coupling capacitive structure C(PH1), the cross-coupling capacitive structure C(NH1), the cross-coupling capacitive structure C(PH2), the cross-coupling capacitive structure C(NH2), and the cross-coupling capacitive structure C(I1) may each be provided as a programmable array of capacitors in order to reduce insertion losses and improve linearity. The cross-coupling capacitive structure C(PH1), the cross-coupling capacitive structure C(NH1), the cross-coupling capacitive structure C(PH2), the cross-coupling capacitive structure C(NH2), and the cross-coupling capacitive structure C(I1) can also be any combination of suitable variable cross-coupling capacitive structures, such as combinations of varactors and programmable arrays of capacitors. Although the H-bridge structure can provide good linearity and low insertion losses, the H-bridge structure can also suffer from common-mode signal transfer.

FIG. **26** illustrates yet another exemplary embodiment of the first tunable RF filter path **66** in the first RF filter structure **60** shown in FIG. **21**. While the exemplary embodiment shown in FIG. **26** is of the first tunable RF filter path **66**, any of the tunable RF filter paths shown in the first RF filter structure **60** of FIG. **21** may be arranged in accordance with the exemplary embodiment shown in FIG. **26**. The first tunable RF filter path **66** shown in FIG. **26** can be used to ameliorate the common-mode signal transfer of the H-bridge structure shown in FIG. **25**. More specifically, the first tunable RF filter path **66** shown in FIG. **26** includes the same embodiment of the resonator R(1,1) and the same embodiment of the resonator R(1,2) described above with respect to FIG. **25**. Furthermore, the first tunable RF filter path **66** shown in FIG. **26** includes the first capacitive voltage divider with the cross-coupling capacitive structure C(PH1) and the cross-coupling capacitive structure C(NH1) described above with respect to FIG. **25**, the second capacitive voltage divider with the cross-coupling capacitive structure C(PH2) and the cross-coupling capacitive structure (CNH2) described above with respect to FIG. **25**, and the cross-coupling capacitive structure C(I1) described above with respect to FIG. **25**. However, in this embodiment, the first tunable RF filter path **66** shown in FIG. **26** also includes a cross-coupling capacitive structure C(PH3), a cross-coupling capacitive structure (CNH3), a cross-coupling capacitive structure C(I2), a cross-coupling capacitive structure C(PH4), and a cross-coupling capacitive structure C(NH4). The cross-coupling capacitive structure C(PH3), the cross-coupling capacitive structure (CNH3), the cross-coupling capacitive structure C(I2), the cross-coupling capacitive structure C(PH4), and the cross-coupling capacitive structure C(NH4) are also embodiments of the cross-coupling capacitive structures C described above with regard to FIG. **21**.

As shown in FIG. **26**, the cross-coupling capacitive structure C(PH3) and the cross-coupling capacitive structure C(NH3) are arranged to form a third capacitive voltage divider. The third capacitive voltage divider is electrically connected to the resonator R(1,1). More specifically, the

cross-coupling capacitive structure C(PH3) is electrically connected between the end **217** of the inductor **208** and a common connection node H3. The cross-coupling capacitive structure C(NH3) is electrically connected between the end **218** of the inductor **208** and the common connection node H3. Additionally, the cross-coupling capacitive structure C(PH4) and the cross-coupling capacitive structure C(NH4) are arranged to form a fourth capacitive voltage divider. The fourth capacitive voltage divider is electrically connected to the resonator R(1,2). More specifically, the cross-coupling capacitive structure C(PH4) is electrically connected between the end **220** of the inductor **212** and a common connection node H4. The cross-coupling capacitive structure C(NH4) is electrically connected between the end **222** of the inductor **212** and the common connection node H4. As shown in FIG. **26**, the cross-coupling capacitive structure C(I2) is electrically connected between first capacitive voltage divider and the second capacitive voltage divider. More specifically, the cross-coupling capacitive structure C(I2) is electrically connected between the common connection node H3 and the common connection node H4. Alternatively, the cross-coupling capacitive structure C(I1) and the cross-coupling capacitive structure C(I2) can be replaced with shorts. The arrangement of the cross-coupling capacitive structure C(PH1), the cross-coupling capacitive structure C(NH1), the cross-coupling capacitive structure C(PH2), the cross-coupling capacitive structure C(NH2), the cross-coupling capacitive structure C(I1), the cross-coupling capacitive structure C(PH3), the cross-coupling capacitive structure C(NH3), the cross-coupling capacitive structure C(PH4), the cross-coupling capacitive structure C(NH4), and the cross-coupling capacitive structure C(I2) shown in FIG. **26** is a double H-bridge structure.

With regard to the third capacitive voltage divider, the cross-coupling capacitive structure C(PH3) is a variable cross-coupling capacitive structure configured to vary a third variable positive electric coupling coefficient provided between the resonator R(1,1) and the common connection node H3. The cross-coupling capacitive structure C(NH3) is a variable cross-coupling capacitive structure configured to vary a third variable negative electric coupling coefficient provided between the resonator R(1,1) and the common connection node H3. Thus, a mutual electric coupling coefficient of the resonator R(1,1) is approximately equal to the first variable positive electric coupling coefficient, the third variable positive electric coupling coefficient, the first variable negative electric coupling coefficient and the third variable negative electric coupling coefficient.

With regard to the fourth capacitive voltage divider, the cross-coupling capacitive structure C(PH4) is a variable cross-coupling capacitive structure configured to vary a fourth variable positive electric coupling coefficient provided between the resonator R(1,2) and the common connection node H4. The cross-coupling capacitive structure C(NH4) is a variable cross-coupling capacitive structure configured to vary a fourth variable negative electric coupling coefficient provided between the resonator R(1,2) and the common connection node H4. Thus, a mutual electric coupling coefficient of the resonator R(1,2) is approximately equal to the second variable positive electric coupling coefficient, the fourth variable positive coupling coefficient, the second variable negative coupling coefficient, and the fourth variable negative electric coupling coefficient. Furthermore, the cross-coupling capacitive structure C(I2) is a variable cross-coupling capacitive structure configured to vary a second variable intermediate electric coupling coefficient provided between the common connection node H3 and the common connection node H4. The first tunable RF filter path **66** shown in FIG. **26** thus has a total mutual coupling coefficient between the resonator R(1,1) and the resonator R(1,2) equal to the sum total of the mutual magnetic coupling coefficient between the inductor **208** and the inductor **212**, the mutual electric coupling coefficient of the resonator R(1,1), the mutual electric coupling coefficient of the resonator R(1,2), the first variable intermediate electric coupling coefficient provided between the common connection node H1 and the common connection node H2 and the second variable intermediate electric coupling coefficient provided between the common connection node H3 and the common connection node H4. The double H-bridge structure thus includes two H-bridge structures. The two H-bridge structures allow for common-mode signal transfers of the two H-bridge structures to oppose one another and thereby be reduced and even cancelled.

FIG. **27** illustrates still another exemplary embodiment of the first tunable RF filter path **66** in the first RF filter structure **60** shown in FIG. **21**. While the exemplary embodiment shown in FIG. **27** is of the first tunable RF filter path **66**, any of the tunable RF filter paths shown in the first RF filter structure **60** of FIG. **21** may be arranged in accordance with the exemplary embodiment shown in FIG. **27**. The first tunable RF filter path **66** shown in FIG. **27** includes the same embodiment of the resonator R(1,1) and the same embodiment of the resonator R(1,2) described above with respect to FIG. **22**. In addition, the first tunable RF filter path **66** shown in FIG. **27** includes the cross-coupling capacitive structure C(P1) and the cross-coupling capacitive structure (CN1) that form the V-bridge structure described above with respect to FIG. **22**. However, the first tunable RF filter path **66** shown in FIG. **27** further includes a resonator R(1,3) and a resonator R(1,4). More specifically, the resonator R(1,3) includes an inductor **226**, a capacitive structure **228**, and a capacitive structure **230**. The resonator R(1,4) includes an inductor **232** and a capacitive structure **234**.

With regard to the resonator R(1,3), the inductor **226** is electrically connected between the capacitive structure **228** and the capacitive structure **230**. More specifically, the inductor **226** has an end **236** and an end **238**, which are disposed opposite to one another. The end **236** is electrically connected to the capacitive structure **228** and the end **238** is electrically connected to the capacitive structure **230**. Both the capacitive structure **228** and the capacitive structure **230** are grounded. Thus, the resonator R(1,3) is a differential resonator. In this embodiment, each of the capacitive structure **228** and the capacitive structure **230** is a variable capacitive structure.

With regard to the resonator R(1,4), the inductor **232** and the capacitive structure **234** are electrically connected in parallel. More specifically, the inductor **232** has an end **240** and an end **242**, which are disposed opposite to one another. The ends **240**, **242** are each electrically connected to the capacitive structure **234**, which is grounded. Thus, the resonator R(1,4) is a single-ended resonator.

In this embodiment, the resonator R(1,1), the resonator R(1,2), the resonator R(1,3), and the resonator R(1,4) are all weakly coupled to one another. The resonator R(1,3) and the resonator R(1,4) are weakly coupled by providing the inductor **226** and the inductor **232** such that the inductor **226** and the inductor **232** are weakly coupled. The resonators R(1,1), R(1,2), R(1,3), and R(1,4) are each operably associated with one another such that energy transfer factors between the resonators R(1,1), R(1,2), R(1,3), and R(1,4) are less than 10%. Although the resonator R(1,3) and the resonator R(1,4) are weakly coupled, the inductor **232** has a maximum lateral

width and a displacement between the inductor **226** and the inductor **232** is less than or equal to half the maximum lateral width of the inductor **232**. As such, the inductor **226** and the inductor **232** are relatively close to one another. The displacement between the inductor **226** and the inductor **232** may be measured from a geometric centroid of the inductor **226** to a geometric centroid of the inductor **232**. The maximum lateral width may be a maximum dimension of the inductor **232** along a plane defined by its largest winding. The weak coupling between the inductor **226** and the inductor **232** is obtained through topological techniques. For example, the inductor **226** and the inductor **232** may be fully or partially aligned, where winding(s) of the inductor **226** and winding(s) of the inductor **232** are configured to provide weak coupling through cancellation. Alternatively or additionally, a plane defining an orientation of the windings of the inductor **226** and a plane defining an orientation of the windings of the inductor **232** may be fully or partially orthogonal to one another.

In some embodiments, all of the inductors **208**, **212**, **226**, **232** are provided such that displacements between each of the inductors **208**, **212**, **226**, **232** are less than or equal to half the maximum lateral width of the inductor **212**. Alternatively, in other embodiments, only a proper subset of the inductors **208**, **212**, **226**, **232** has displacements that are less than or equal to half the maximum lateral width of the inductor **212**. For example, while the displacement between the inductor **208** and the inductor **212** may be less than or equal to half the maximum lateral width of the inductor **212** and the displacement between the inductor **226** and the inductor **232** may be less than or equal to half the maximum lateral width of the inductor **232**, the displacements from the inductor **208** and the inductor **212** to the inductor **226** and the inductor **232** may each be greater than half the maximum lateral width of the inductor **212** and half the maximum lateral width of the inductor **232**.

The inductors **208**, **212**, **226**, and **232** are magnetically coupled to the each other such that an RF signal received at the end **217** of the inductor **208** with a voltage polarity (i.e., either a positive voltage polarity or a negative voltage polarity) results in filtered RF signals with the same voltage polarity being transmitted out the end **220** of the inductor **212**, the end **236** of the inductor **226**, and the end **240** of the inductor **232**. Also, the inductors **208**, **212**, **226**, and **232** are magnetically coupled to the each other such that an RF signal received at the end **240** of the inductor **232** with a voltage polarity (i.e., either a positive voltage polarity or a negative voltage polarity) results in filtered RF signals with the same voltage polarity being transmitted out the end **217** of the inductor **208**, the end **220** of the inductor **212**, and the end **236** of the inductor **226**. This is indicated in FIG. **27** by the dot convention where a dot is placed at the end **217** of the inductor **208**, a dot is placed at the end **220** of the inductor **212**, a dot is placed at the end **236** of the inductor **226**, and a dot is placed at the end **240** of the inductor **232**.

The first tunable RF filter path **66** shown in FIG. **27** includes a cross-coupling capacitive structure C(P**3**), a cross-coupling capacitive structure C(N**3**), a cross-coupling capacitive structure C(P**4**), and a cross-coupling capacitive structure C(N**4**) electrically connected between the resonator R(**1**,**2**) and the resonator R(**1**,**3**). With respect to the resonator R(**1**,**2**) and the resonator R(**1**,**3**), the cross-coupling capacitive structure C(P**3**), the cross-coupling capacitive structure C(N**3**), the cross-coupling capacitive structure C(P**4**) and the cross-coupling capacitive structure C(N**4**) are arranged to have the X-bridge structure described above with respect to FIG. **23**. Thus, the cross-coupling capacitive structure C(P**3**) is electrically connected between the end **220** and the end **236** so as to provide a variable positive electric coupling coefficient between the resonator R(**1**,**2**) and the resonator R(**1**,**3**). The cross-coupling capacitive structure C(P**3**) is a variable cross-coupling capacitive structure configured to vary the variable positive electric coupling coefficient provided between the resonator R(**1**,**2**) and the resonator R(**1**,**3**). Also, the cross-coupling capacitive structure C(N**3**) is electrically connected between the end **220** and the end **238** so as to provide a variable negative electric coupling coefficient between the resonator R(**1**,**2**) and the resonator R(**1**,**3**). The cross-coupling capacitive structure C(N**3**) is a variable cross-coupling capacitive structure configured to vary the variable negative electric coupling coefficient provided between the resonator R(**1**,**2**) and the resonator R(**1**,**3**).

Additionally, the cross-coupling capacitive structure C(P**4**) is electrically connected between the end **222** and the end **238** so as to provide another variable positive electric coupling coefficient between the resonator R(**1**,**2**) and the resonator R(**1**,**3**). The cross-coupling capacitive structure C(P**4**) is a variable cross-coupling capacitive structure configured to vary the other variable positive electric coupling coefficient provided between the resonator R(**1**,**2**) and the resonator R(**1**,**3**). Finally, the cross-coupling capacitive structure C(N**4**) is electrically connected between the end **222** and the end **236** so as to provide another variable negative electric coupling coefficient between the resonator R(**1**,**2**) and the resonator R(**1**,**3**). The cross-coupling capacitive structure C(N**4**) is a variable cross-coupling capacitive structure configured to vary the other variable negative electric coupling coefficient provided between the resonator R(**1**,**2**) and the resonator R(**1**,**3**).

With respect to the resonator R(**1**,**3**) and the resonator R(**1**,**4**), the first tunable RF filter path **66** shown in FIG. **27** includes a cross-coupling capacitive structure C(P**5**) and a cross-coupling capacitive structure C(N**5**) electrically connected between the resonator R(**1**,**3**) and the resonator R(**1**,**4**). With respect to the resonator R(**1**,**3**) and the resonator R(**1**,**4**), the cross-coupling capacitive structure C(P**5**) and the cross-coupling capacitive structure C(N**5**) are arranged to have the V-bridge structure described above with respect to FIG. **22**. Thus, the cross-coupling capacitive structure C(P**5**) is electrically connected between the end **236** and the end **240** so as to provide a variable positive electric coupling coefficient between the resonator R(**1**,**3**) and the resonator R(**1**,**4**). The cross-coupling capacitive structure C(P**5**) is a variable cross-coupling capacitive structure configured to vary the variable positive electric coupling coefficient provided between the resonator R(**1**,**3**) and the resonator R(**1**,**4**). Also, the cross-coupling capacitive structure C(N**5**) is electrically connected between the end **238** and the end **240** so as to provide a variable negative electric coupling coefficient between the resonator R(**1**,**3**) and the resonator R(**1**,**4**). The cross-coupling capacitive structure C(N**5**) is a variable cross-coupling capacitive structure configured to vary the variable negative electric coupling coefficient provided between the resonator R(**1**,**3**) and the resonator R(**1**,**4**).

The embodiment of first RF filter structure **60** shown in FIG. **27** also includes a cross-coupling capacitive structure C(P**6**), a cross-coupling capacitive structure C(N**6**), a cross-coupling capacitive structure C(P**7**), a cross-coupling capacitive structure C(N**7**), and a cross-coupling capacitive structure C(P**8**). With respect to the resonator R(**1**,**1**) and the resonator R(**1**,**3**), the cross-coupling capacitive structure C(P**6**) and the cross-coupling capacitive structure C(N**6**) are

each electrically connected between the resonator R(**1**,**1**) and the resonator R(**1**,**3**). The cross-coupling capacitive structure C(P**6**) is electrically connected between the end **217** and the end **236** so as to provide a variable positive electric coupling coefficient between the resonator R(**1**,**1**) and the resonator R(**1**,**3**). The cross-coupling capacitive structure C(P**6**) is a variable cross-coupling capacitive structure configured to vary the variable positive electric coupling coefficient provided between the resonator R(**1**,**1**) and the resonator R(**1**,**3**). Also, the cross-coupling capacitive structure C(N**6**) is electrically connected between the end **217** and the end **238** so as to provide a variable negative electric coupling coefficient between the resonator R(**1**,**1**) and the resonator R(**1**,**3**). The cross-coupling capacitive structure C(N**6**) is a variable cross-coupling capacitive structure configured to vary the variable negative electric coupling coefficient provided between the resonator R(**1**,**1**) and the resonator R(**1**,**3**).

With respect to the resonator R(**1**,**2**) and the resonator R(**1**,**4**), the cross-coupling capacitive structure C(P**7**) and the cross-coupling capacitive structure C(N**7**) are each electrically connected between the resonator R(**1**,**2**) and the resonator R(**1**,**4**). The cross-coupling capacitive structure C(P**7**) is electrically connected between the end **220** and the end **240** so as to provide a variable positive electric coupling coefficient between the resonator R(**1**,**2**) and the resonator R(**1**,**4**). The cross-coupling capacitive structure C(P**7**) is a variable cross-coupling capacitive structure configured to vary the variable positive electric coupling coefficient provided between the resonator R(**1**,**2**) and the resonator R(**1**,**4**). Also, the cross-coupling capacitive structure C(N**7**) is electrically connected between the end **222** and the end **240** so as to provide a variable negative electric coupling coefficient between the resonator R(**1**,**2**) and the resonator R(**1**,**4**). The cross-coupling capacitive structure C(N**7**) is a variable cross-coupling capacitive structure configured to vary the variable negative electric coupling coefficient provided between the resonator R(**1**,**2**) and the resonator R(**1**,**4**).

With respect to the resonator R(**1**,**1**) and the resonator R(**1**,**4**), the cross-coupling capacitive structure C(P**8**) is electrically connected between the resonator R(**1**,**1**) and the resonator R(**1**,**4**). The cross-coupling capacitive structure C(P**8**) is electrically connected between the end **217** and the end **240** so as to provide a variable positive electric coupling coefficient between the resonator R(**1**,**1**) and the resonator R(**1**,**4**). The cross-coupling capacitive structure C(P**8**) is a variable cross-coupling capacitive structure configured to vary the variable positive electric coupling coefficient provided between the resonator R(**1**,**1**) and the resonator R(**1**,**4**).

Furthermore, in this embodiment, a variable capacitive structure **244** is electrically connected in series between the terminal **200** and the resonator R(**1**,**1**). The variable capacitive structure **244** is configured to vary a variable impedance of the first tunable RF filter path **66** as measured into the terminal **200** in order to match a source or a load impedance at the terminal **200**. In addition, a variable capacitive structure **245** is electrically connected in series between the resonator R(**1**,**4**) and the terminal **202**. The variable capacitive structure **245** is configured to vary a variable impedance of the first tunable RF filter path **66** as seen into the terminal **202** in order to match a source or a load impedance at the terminal **202**.

FIGS. **28**A through **28**D illustrate different embodiments of the first RF filter structure **60**, wherein each of the embodiments has different combinations of input terminals and output terminals. The first RF filter structure **60** can have various topologies. For example, the embodiment of the first RF filter structure **60** shown in FIG. **28**A has a single input terminal IN and an integer number i of output terminals OUT_1-OUT_i. As will be discussed below, the first RF filter structure **60** may define various tunable RF filter paths (e.g., the first tunable RF filter path **66**, the second tunable RF filter path **68**, the third tunable RF filter path **110**, the fourth tunable RF filter path **112**, the fifth tunable RF filter path **122**, and the sixth tunable RF filter path **124** shown in FIGS. **4**, **8**, **11**, **12**, and **14**-**20**) that may be used to receive different RF signals at the input terminal IN and transmit a different filtered RF signal from each of the output terminals OUT_1-OUT_i. As such, the first RF filter structure **60** shown in FIG. **28**A may be specifically configured to provide Single Input Multiple Output (SIMO) operations.

With regard to the embodiment of the first RF filter structure **60** shown in FIG. **28**B, the first RF filter structure **60** has an integer number j of input terminals IN_1-IN_j and a single output terminal OUT. As will be discussed below, the first RF filter structure **60** may define various tunable RF filter paths (e.g., the first tunable RF filter path **66**, the second tunable RF filter path **68**, the third tunable RF filter path **110**, the fourth tunable RF filter path **112**, the fifth tunable RF filter path **122**, and the sixth tunable RF filter path **124** shown in FIGS. **4**, **8**, **11**, **12**, and **14**-**20**) that may be used to receive a different RF signal at each of the input terminals IN_1-IN_j and transmit different filtered RF signals from the single output terminal OUT. As such, the first RF filter structure **60** shown in FIG. **28**B may be specifically configured to provide Multiple Input Single Output (MISO) operations.

With regard to the embodiment of the first RF filter structure **60** shown in FIG. **28**C, the first RF filter structure **60** has a single input terminal IN and a single output terminal OUT. As will be discussed below, the first RF filter structure **60** may define various tunable RF filter paths (e.g., the first tunable RF filter path **66**, the second tunable RF filter path **68**, the third tunable RF filter path **110**, the fourth tunable RF filter path **112**, the fifth tunable RF filter path **122**, and the sixth tunable RF filter path **124** shown in FIGS. **4**, **8**, **11**, **12**, and **14**-**20**) that may be used to receive different RF signals at the single input terminal IN and transmit different filtered RF signals from the output terminal OUT. As such, the first RF filter structure **60** shown in FIG. **28**A may be specifically configured to provide Single Input Single Output (SISO) operations.

With regard to the embodiment of the first RF filter structure **60** shown in FIG. **28**D, the first RF filter structure **60** has the input terminals IN_1-IN_j and the output terminals OUT_1-OUT_i. As will be discussed below, the first RF filter structure **60** may define various tunable RF filter paths (e.g., the first tunable RF filter path **66**, the second tunable RF filter path **68**, the third tunable RF filter path **110**, the fourth tunable RF filter path **112**, the fifth tunable RF filter path **122**, and the sixth tunable RF filter path **124** shown in FIGS. **4**, **8**, **11**, **12**, and **14**-**20**) that may be used to receive a different RF signal at each of the input terminal IN_1-IN_j and transmit a different filtered RF signal from each of the output terminals OUT_1-OUT_i.

FIG. **29** illustrates another embodiment of the first RF filter structure **60**. The first RF filter structure **60** shown in FIG. **29** includes one embodiment of the first tunable RF filter path **66** and one embodiment of the second tunable RF filter path **68**. The first tunable RF filter path **66** includes the resonator R(**1**,**1**) and the resonator R(**1**,**2**). The resonator R(**1**,**1**) and the resonator R(**1**,**2**) are thus a first pair of weakly coupled resonators in the first tunable RF filter path **66**. The second tunable RF filter path **68** includes the resonator

R(2,1) and the resonator R(2,2). The resonator R(2,1) and the resonator R(2,2) are thus a second pair of weakly coupled resonators in the second tunable RF filter path **68**.

As explained in further detail below, a set S of cross-coupling capacitive structures is electrically connected between the resonator R(1,1), the resonator R(1,2), the resonator R(2,1), and the resonator R(2,2) in the first tunable RF filter path **66** and the second tunable RF filter path **68**. More specifically, the set S includes a cross-coupling capacitive structure C(PM1), a cross-coupling capacitive structure C(PM2), a cross-coupling capacitive structure C(PM3), a cross-coupling capacitive structure C(PM4), a cross-coupling capacitive structure C(NM1), and a cross-coupling capacitive structure C(NM2). The set S of cross-coupling capacitive structures interconnects the resonator R(1,1), the resonator R(1,2), the resonator R(2,1), and the resonator R(2,2) so that the first RF filter structure **60** shown in FIG. **29** is a matrix (in this embodiment, a 2×2 matrix) of the resonators R. In alternative embodiments, some of the cross-coupling capacitive structures C(PM1), C(PM2), C(PM3), C(PM4), C(NM1), and C(NM2) may be omitted depending on the filter transfer function to be provided.

Unlike in the embodiment of the first RF filter structure **60** shown in FIG. **21**, in this embodiment, the first tunable RF filter path **66** and the second tunable RF filter path **68** are not independent of one another. The set S of cross-coupling capacitive structures thus provides for additional tunable RF filter paths to be formed from the resonator R(1,1), the resonator R(1,2), the resonator R(2,1), and the resonator R(2,2). As discussed in further detail below, the arrangement of the first RF filter structure **60** shown in FIG. **29** can be used to realize examples of each of the embodiments of the first RF filter structure **60** shown in FIGS. **28**A-**28**D.

The cross-coupling capacitive structure C(PM1) is electrically connected within the first tunable RF filter path **66**, while the cross-coupling capacitive structure C(PM4) is electrically connected within the second tunable RF filter path **68**. More specifically, the cross-coupling capacitive structure C(PM1) is electrically connected between the resonator R(1,1) and the resonator R(1,2) in the first tunable RF filter path **66**. The cross-coupling capacitive structure C(PM1) is a variable cross-coupling capacitive structure configured to provide and vary a (e.g., positive or negative) electric coupling coefficient between the resonator R(1,1) and the resonator R(1,2). The cross-coupling capacitive structure C(PM4) is a variable cross-coupling capacitive structure configured to provide and vary a (e.g., positive or negative) electric coupling coefficient between the resonator R(2,1) and the resonator R(2,2) in the second tunable RF filter path **68**.

To provide additional tunable RF filter paths, the cross-coupling capacitive structure C(PM2), the cross-coupling capacitive structure C(PM3), the cross-coupling capacitive structure C(NM1), and the cross-coupling capacitive structure C(NM2) are each electrically connected between the first tunable RF filter path **66** and the second tunable RF filter path **68**. The cross-coupling capacitive structure C(PM2) is a variable cross-coupling capacitive structure configured to provide and vary a (e.g., positive or negative) electric coupling coefficient between the resonator R(1,2) and the resonator R(2,2). The cross-coupling capacitive structure C(PM3) is a variable cross-coupling capacitive structure configured to provide and vary a (e.g., positive or negative) electric coupling coefficient between the resonator R(1,1) and the resonator R(2,1). The cross-coupling capacitive structure C(NM1) is a variable cross-coupling capacitive structure configured to provide and vary a (e.g., positive or negative) electric coupling coefficient between the resonator R(1,1) and the resonator R(2,2). The cross-coupling capacitive structure C(NM2) is a variable cross-coupling capacitive structure configured to provide and vary a (e.g., positive or negative) electric coupling coefficient between the resonator R(1,2) and the resonator R(2,1).

The first tunable RF filter path **66** is electrically connected between the input terminal IN_1 and the output terminal OUT_1. In addition, the second tunable RF filter path **68** is electrically connected between an input terminal IN_2 and an output terminal OUT_2. Accordingly, the first RF filter structure **60** shown in FIG. **29** is an embodiment of the first RF filter structure **60** shown in FIG. **28**D. However, the input terminal IN_2 and the output terminal OUT_1 are optional and may be excluded in other embodiments. For example, if the input terminal IN_2 were not provided, but the output terminal OUT_1 and the output terminal OUT_2 were provided, the first RF filter structure **60** shown in FIG. **29** would be provided as an embodiment of the first RF filter structure **60** shown in FIG. **28**A. It might, for example, provide a diplexing or a duplexing function. Furthermore, more than two input terminals or output terminals can be provided. Some examples include embodiments of the first RF filter structure **60** used for triplexing, quadplexing, herplexing, and providing FDD and carrier aggregation.

The first tunable RF filter path **66** still provides a path between the input terminal IN_1 and the output terminal OUT_1. However, assuming that the input terminal IN_2 is not provided for SIMO operation, the cross-coupling capacitive structure C(NM1) is electrically connected between the first tunable RF filter path **66** and the second tunable RF filter path **68** to define a first additional tunable RF filter path between the input terminal IN_1 and the output terminal OUT_2. The first additional tunable RF filter path is thus provided by a portion of the first tunable RF filter path **66** and a portion of the second tunable RF filter path **68**. More specifically, the first additional tunable RF filter path includes the resonator R(1,1) and the resonator R(2,2). The first additional tunable RF filter path also includes the cross-coupling capacitive structure C(NM1) that is electrically connected between the resonator R(1,1) and the resonator R(1,2). A second additional tunable RF filter path, a third additional tunable RF filter path, a fourth additional tunable RF filter path, and a fifth additional tunable RF filter path are also defined from the input terminal IN_1 to the output terminal OUT_2. The second additional tunable RF filter path includes the resonator R(1,1), the cross-coupling capacitive structure C(PM1), the resonator R(1,2), the cross-coupling capacitive C(PM2), and the resonator R(2,2). Additionally, the third additional tunable RF filter path includes the resonator R(1,1), the cross-coupling capacitive structure C(PM3), the resonator R(2,1), the cross-coupling capacitive C(PM4), and the resonator R(2,2). The fourth additional tunable RF filter path includes the resonator R(1,1), the cross-coupling capacitive structure C(PM1), the resonator R(1,2), the cross-coupling capacitive C(NM2), the resonator R(2,1), the cross-coupling capacitive structure C(PM4), and the resonator R(2,2). Finally, the fifth additional tunable RF filter path includes the resonator R(1,1), the cross-coupling capacitive structure C(PM3), the resonator R(2,1), the cross-coupling capacitive C(NM2), the resonator R(1,2), the cross-coupling capacitive structure C(PM2), and the resonator R(2,2).

If the output terminal OUT_1 were not provided, but the input terminal IN_1 and the input terminal IN_2 were provided, the first RF filter structure **60** shown in FIG. **29** would be provided as an embodiment of the first RF filter structure **60**

shown in FIG. **28**B. In this case, the second tunable RF filter path **68** still provides a path between the input terminal IN_2 and the output terminal OUT_2. However, assuming that the output terminal OUT_1 is not provided for MISO operation, the first additional tunable RF filter path, the second additional tunable RF filter path, the third additional tunable RF filter path, the fourth additional tunable RF filter path, and the fifth additional tunable RF filter path would provide the paths from the input terminal IN_1 to the output terminal OUT_2.

Finally, if the input terminal IN_2 and the output terminal OUT_2 were not provided, the first RF filter structure **60** shown in FIG. **29** would be provided as an embodiment of the first RF filter structure **60** shown in FIG. **28**C. In this case, the second tunable RF filter path **68** still provides a path between the input terminal IN_2 and the output terminal OUT_2. However, assuming that the output terminal IN_1 is not provided for MISO operation, the first additional tunable RF filter path, the second additional tunable RF filter path, the third additional tunable RF filter path, the fourth additional tunable RF filter path, and the fifth additional tunable RF filter path would provide the paths from the input terminal IN_1 to the output terminal OUT_2. This may constitute a SISO filter implemented with an array to allow for a large number of signal paths and thus create one or more notches in the transfer function.

With regard to the resonators R(**1**,**1**), R(**1**,**2**), R(**2**,**1**), R(**2**,**2**) shown in FIG. **29**, the resonators R(**1**,**1**), R(**1**,**2**), R(**2**,**1**), R(**2**,**2**) may each be single-ended resonators, differential resonators, or different combinations of single-ended resonators and differential resonators. The resonator R(**1**,**1**) and the resonator R(**1**,**2**) in the first tunable RF filter path **66** may each be provided in accordance with any of the embodiments of the resonator R(**1**,**1**) and the resonator R(**1**,**2**) described above with respect to FIGS. **22**-**27**. For example, the resonator R(**1**,**1**) may include the inductor **208** (see FIG. **24**) and the capacitive structure **210** (see FIG. **24**). The resonator R(**1**,**2**) may include the inductor **212** and the capacitive structure **214** (see FIG. **24**). The resonator R(**2**,**1**) may include an inductor (like the inductor **208** in FIG. **24**) and a capacitive structure (like the capacitive structure **210** shown in FIG. **24**). The resonator R(**2**,**2**) may include an inductor (like the inductor **212** in FIG. **24**) and a capacitive structure (like the capacitive structure **214** shown in FIG. **24**).

Additionally, one or more of the resonators R(**1**,**1**), R(**1**,**2**) in the first tunable RF filter path **66** and one or more of the resonators R(**2**,**1**), R(**2**,**2**) in the second tunable RF filter path **68** may be weakly coupled. Thus, the resonators R(**1**,**1**), R(**1**,**2**), R(**2**,**1**), R(**2**,**2**) may be operably associated with one another such that an energy transfer factor between each of the resonators R(**1**,**1**), R(**1**,**2**), R(**2**,**1**), R(**2**,**2**) is less than 10%. Alternatively, the energy transfer factor between only a subset of the resonators R(**1**,**1**), R(**1**,**2**), R(**2**,**1**), R(**2**,**2**) is less than 10%. In addition, in at least some embodiments, not all of the resonators R(**1**,**1**), R(**1**,**2**), R(**2**,**1**), R(**2**,**2**) are weakly coupled to one another.

In this embodiment, the inductor **208** (see FIG. **24**) of the resonator R(**1**,**1**), the inductor **212** (see FIG. **24**) of the resonator R(**1**,**2**), the inductor of the resonator R(**2**,**1**), and the inductor of the resonator R(**2**,**2**) may all be weakly coupled to one another. In some embodiments, displacements between the inductor **208** (see FIG. **24**) of the resonator R(**1**,**1**), the inductor **212** (see FIG. **24**) of the resonator R(**1**,**2**), the inductor of the resonator R(**2**,**1**), and the inductor of the resonator R(**2**,**2**) may all be less than or equal to half the maximum lateral width of the inductor **212**. Alternatively, in other embodiments, only a proper subset of the inductor **208** (see FIG. **24**) of the resonator R(**1**,**1**), the inductor **212** (see FIG. **24**) of the resonator R(**1**,**2**), the inductor of the resonator R(**2**,**1**), and the inductor of the resonator R(**2**,**2**) may have displacements that are less than or equal to half the maximum lateral width of the inductor **212**.

FIG. **30** illustrates yet another embodiment of the first RF filter structure **60**. The first RF filter structure **60** includes the resonators R described above with respect to FIG. **21**. The resonators R of the first RF filter structure **60** shown in FIG. **30** are arranged as a two-dimensional matrix of the resonators R. In this embodiment, the first RF filter structure **60** includes an embodiment of the first tunable RF filter path **66**, an embodiment of the second tunable RF filter path **68**, an embodiment of the third tunable RF filter path **110**, and an embodiment of the fourth tunable RF filter path **112**. Thus, the integer M for the first RF filter structure **60** shown in FIG. **30** is four (4) or greater. Additionally, the integer N for the first RF filter structure **60** shown in FIG. **30** is 3 or greater. Note that in alternative embodiments, the integer M may be two (2) or greater and the integer N may be two (2) or greater. It should be noted that in alternative embodiments the number of resonators R in each row and column may be the same or different.

In the embodiment of the first RF filter structure **60** shown in FIG. **30**, the first tunable RF filter path **66** includes the resonator R(**1**,**1**), the resonator R(**1**,**2**), and one or more additional resonators R, such as the resonator R(**1**,N), since the integer N is 3 or greater. All of the weakly coupled resonators R(**1**,**1**) through R(**1**,N) are weakly coupled to one another. Furthermore, the first tunable RF filter path **66** is electrically connected between a terminal TU**1** and a terminal TANT**1**. With regard to the second tunable RF filter path **68**, the second tunable RF filter path **68** includes the resonator R(**2**,**1**), the resonator R(**2**,**2**), and one or more additional resonators R, such as the resonator R(**2**,N), since the integer N is 3 or greater. All of the weakly coupled resonators R(**2**,**1**) through R(**2**,N) are weakly coupled to one another. Furthermore, the second tunable RF filter path **68** is electrically connected between a terminal TU**2** and a terminal TANT**2**.

With regard to the third tunable RF filter path **110**, the third tunable RF filter path **110** includes a resonator R(**3**,**1**), a resonator R(**3**,**2**), and one or more additional resonators R, such as a resonator R(**3**,N), since the integer N is 3 or greater. All of the weakly coupled resonators R(**3**,**1**) through R(**3**,N) are weakly coupled to one another. Alternatively, only a proper subset of them may be weakly coupled to one another. Furthermore, the third tunable RF filter path **110** is electrically connected between a terminal TU**3** and a terminal TANT**3**. With regard to the fourth tunable RF filter path **112**, the fourth tunable RF filter path **112** includes the resonator R(M,**1**), the resonator R(M,**2**), and one or more additional resonators R, such as the resonator R(M,N), since the integer N is 3 or greater. All of the weakly coupled resonators R(M,**1**) through R(M,N) are weakly coupled to one another. Alternatively, only a proper subset of them may be weakly coupled to one another. Furthermore, the fourth tunable RF filter path **112** is electrically connected between a terminal TU**4** and a terminal TANT**4**.

The first tunable RF filter path **66** is configured to receive RF signals and output filtered RF signals. It should be noted that the first RF filter structure **60** may include any number of tunable RF filter paths, such as, for example, the third tunable RF filter path **110**, the fourth tunable RF filter path **112**, the fifth tunable RF filter path **122**, and the sixth tunable

RF filter path **124**, described above with respect to FIGS. **11-14**. Each of the resonators R may be a tunable resonator, which allows for a resonant frequency of each of the resonators to be varied to along a frequency range. In alternative embodiments, only a proper subset of the resonators R may be tunable. In still another embodiment, all of the resonators R are not tunable, but rather have a fixed transfer function.

In some embodiments, all of the resonators R in the first RF filter structure **60** shown in FIG. **30** are weakly coupled to one another. Thus, the resonators R may all be operably associated with one another such that energy transfer factors between the resonators R are less than 10%. Alternatively, the energy transfer factor is less than 10% only among a proper subset of the resonators R. In other embodiments, only the resonators R in adjacent tunable RF filter paths **66**, **68**, **110**, **112** are weakly coupled to one another. For example, all the resonators R(**1**,**1**) through R(**1**,N) may be weakly coupled to all the resonators R(**2**,**1**) through R(**2**,N). In still other embodiments, only subsets of adjacent resonators R may be weakly coupled to each other. For example, the resonators R(**1**,**1**), R(**1**,**2**) may be weakly coupled to the resonators R(**2**,**1**), R(**2**,**2**), while the resonators R(**3**,**1**), R(**3**,**2**) may be weakly coupled to the resonators R(M,**1**), R(M,**2**). These and other combinations would be apparent to one of ordinary skill in the art in light of this disclosure.

Sets S(**1**), S(**2**), S(**3**), S(**4**), S(**5**), and S(**6**) of cross-coupled capacitive structures are electrically connected between the resonators R. Each of the sets S(**1**), S(**2**), S(**3**), S(**4**), S(**5**), and S(**6**) is arranged like the set S of cross-coupled capacitive structures described above with respect to FIG. **29**. For example, in one particular exemplary embodiment (e.g., when M=4 and N=3), the set S(**1**) of cross-coupled capacitive structures is electrically connected between the resonators R(**1**,**1**), R(**1**,**2**) in the first tunable RF filter path **66** and the resonators R(**2**,**1**), R(**2**,**2**) in the second tunable RF filter path **68**. The set S(**2**) of cross-coupled capacitive structures is electrically connected between the resonators R(**1**,**2**), R(**1**,N) in the first tunable RF filter path **66** and the resonators R(**2**,**2**), R(**2**,N) in the second tunable RF filter path **68**. The set S(**3**) of cross-coupled capacitive structures is electrically connected between the resonators R(**2**,**1**), R(**2**,**2**) in the second tunable RF filter path **68** and the resonators R(**3**,**1**), R(**3**,**2**) in the third tunable RF filter path **110**. The set S(**4**) of cross-coupled capacitive structures is electrically connected between the resonators R(**2**,**2**), R(**2**,N) in the second tunable RF filter path **68** and the resonators R(**3**,**2**), R(**3**,N) in the third tunable RF filter path **110**. The set S(**5**) of cross-coupled capacitive structures is electrically connected between the resonators R(**3**,**1**), R(**3**,**2**) in the third tunable RF filter path **110** and the resonators R(M,**1**), R(M,**2**) in the fourth tunable RF filter path **112**. Finally, the set S(**6**) of cross-coupled capacitive structures is electrically connected between the resonators R(**3**,**2**), R(**3**,N) in the third tunable RF filter path **110** and the resonators R(M,**2**), R(M,N) in the fourth tunable RF filter path **112**. Note that some cross-coupled capacitive structures in the sets S(**1**), S(**2**), S(**3**), S(**4**), S(**5**), and S(**6**) of cross-coupled capacitive structures for the resonators R in adjacent columns or in adjacent ones of the tunable RF filter paths **66**, **68**, **110**, **112** overlap. This is because in the matrix of the resonators R, each of the resonators R is adjacent to multiple other ones of the resonators R. In another embodiment, the sets S(**1**), S(**2**), S(**3**), S(**4**), S(**5**), and S(**6**) of cross-coupled capacitive structures may be connected between non-adjacent resonators R. For example, there may be cross-coupled capacitive structures between resonators R that are more than one column or row apart.

FIG. **31** illustrates the embodiment of the first RF filter structure **60** shown in FIG. **30** electrically connected to the first RF antenna **16**, the second RF antenna **32**, a third RF antenna **246**, and a fourth RF antenna **247**. More specifically, the first tunable RF filter path **66** is electrically connected to the first RF antenna **16** at the terminal TANT**1**. The second tunable RF filter path **68** is electrically connected to the second RF antenna **32** at the terminal TANT**2**. The third tunable RF filter path **110** is electrically connected to the third RF antenna **246** at the terminal TANT**3**. The fourth tunable RF filter path **112** is electrically connected to the fourth RF antenna **247** at the terminal TANT**4**. With the sets S(**1**), S(**2**), S(**3**), S(**4**), S(**5**), and S(**6**) of cross-coupled capacitive structures, the first RF filter structure **60** shown in FIG. **31** forms an interconnected two-dimensional matrix of the resonators R. Thus, in addition to the first tunable RF filter path **66**, the second tunable RF filter path **68**, the third tunable RF filter path **110**, and the fourth tunable RF filter path **112**, the sets S(**1**), S(**2**), S(**3**), S(**4**), S(**5**), and S(**6**) of cross-coupled capacitive structures provide a multitude of additional tunable RF filter paths between the terminals TU**1**, TU**2**, TU**3**, TU**4** and the terminals TANT**1**, TANT**2**, TANT**3**, TANT**4**. It should be noted that in alternative embodiments, the terminals TANT**1**, TANT**2**, TANT**3**, TANT**4** may not be connected to antennas. Some antennas may be omitted depending on the functionality being realized.

By tuning the sets S(**1**), S(**2**), S(**3**), S(**4**), S(**5**), and S(**6**), the first RF filter structure **60** shown in FIG. **31** can be tuned so that any combination of the resonators R is selectable for the propagation of RF signals. More specifically, the first RF filter structure **60** shown in FIG. **31** is tunable to route RF receive signals from any combination of the terminals TANT**1**, TANT**2**, TANT**3**, TANT**4** to any combination of the terminals TU**1**, TU**2**, TU**3**, TU**4**. Additionally, the first RF filter structure **60** shown in FIG. **31** is tunable to route RF transmission signals from any combination of the terminals TU**1**, TU**2**, TU**3**, TU**4** to the terminals TANT**1**, TANT**2**, TANT**3**, TANT**4**. Accordingly, the first RF filter structure **60** can be configured to implement various MIMO, SIMO, MISO, and SISO operations.

FIG. **32** illustrates the first RF filter structure **60** shown in FIGS. **30** and **31** with examples of additional tunable RF filter paths **248**, **250** highlighted. It should be noted, however, that there are a vast number of additional combinations of the resonators R that may be selected to provide tunable RF filter paths (e.g., the first tunable RF filter path **66**, the second tunable RF filter path **68**, the third tunable RF filter path **110**, the fourth tunable RF filter path **112**, the additional tunable RF filter path **248**, and the additional tunable RF filter path **250**) between the terminals TU**1**, TU**2**, TU**3**, TU**4** and the terminals TANT**1**, TANT**2**, TANT**3**, TANT**4**. An explicit description of all of the various combinations of the resonators R that may be implemented with the first RF filter structure **60** shown in FIGS. **30-32** is simply impractical given the high number of possible combinations. Along with the previous descriptions, the additional tunable RF filter paths **248**, **250** are highlighted in FIG. **32** simply to give examples of the basic concepts. However, the combinations provided for the additional tunable RF filter paths **248**, **250** are in no way limiting, as any combination of the resonators R may be selected to route RF signals between the terminals TU**1**, TU**2**, TU**3**, TU**4** and the terminals TANT**1**, TANT**2**, TANT**3**, TANT**4**. Any number of functions, such as signal

combining, splitting, multiplexing, and demultiplexing, with various filtering profiles for each, may be realized.

With regard to the additional tunable RF filter paths **248**, **250** highlighted in FIG. **32**, the additional tunable RF filter paths **248**, **250** may be used during MIMO, SIMO, MISO, and SISO operations. More specifically, the additional tunable RF filter path **248** connects the terminal TANT**1** to the terminal TU**2**. The additional tunable RF filter path **250** connects the terminal TANT**3** to the terminal TU**2**. As such, the first RF filter structure **60** may be tuned so that the additional tunable RF filter path **248** and the additional tunable RF filter path **250** are selected in a MISO operation from the terminal TANT**1** and the terminal TANT**3** to the terminal TU**2**. The additional tunable RF filter paths **248**, **250** may also be used in SIMO operations. For example, the first RF filter structure **60** may be tuned so that the first tunable RF filter path **66** and the additional tunable RF filter path **248** are selected in a SIMO operation from the terminal TU**2** to the terminal TANT**1**. The additional tunable RF filter paths **248**, **250** can also be used in SISO operations from the terminal TANT**1** to the terminal TU**2** or from the terminal TANT**3** to the terminal TU**2**. Finally, the additional tunable RF filter paths **248**, **250** may also be used in SIMO operations. For instance, the first RF filter structure **60** may be tuned so that the first tunable RF filter path **66** and the additional tunable RF filter path **250** are selected in a SIMO operation from the terminal TANT**1** to the terminal TU**1** and from the terminal TANT**3** to the terminal TU**2**.

In some applications involving the first RF filter structure **60** in FIGS. **30-32**, MISO and SIMO operations can be used in conjunction with wideband antenna cables or fiber for transmitting RF signals in multiple RF communication frequency bands. Specific communication frequency bands can be processed by certain dedicated RF filtering paths in the first RF filter structure **60**. For example, different RF signals may be injected from a wideband antenna and then propagated along different dedicated tunable RF filter paths in the first RF filter structure **60** to the terminals TU**1**, TU**2**, TU**3**, TU**4**. These dedicated tunable RF filter paths can be configured to have a transfer function that is specifically designed to handle these RF signals. Furthermore, the first RF filter structure **60** shown in FIGS. **30-32** is configured to tune a transfer function of any of the specific tunable RF filter paths (e.g., the first tunable RF filter path **66**, the second tunable RF filter path **68**, the third tunable RF filter path **110**, the fourth tunable RF filter path **112**, the additional tunable RF filter path **248**, and the additional tunable RF filter path **250**) in the first RF filter structure **60** by tuning resonators R that are not in the specific tunable RF filter path being used to route RF signals. This can help reduce out-of-band noise and reduce insertion losses. It can also improve isolation and out-of-band attenuation.

FIG. **33** illustrates yet another embodiment of the first RF filter structure **60**. The first RF filter structure **60** includes the resonators R and is arranged as a two-dimensional matrix of the resonators R, where N is equal to four (4) and M is equal to three (3). In this embodiment, the first RF filter structure **60** includes an embodiment of the first tunable RF filter path **66**, an embodiment of the second tunable RF filter path **68**, and an embodiment of the third tunable RF filter path **110**. It should be noted that in alternative embodiments, the number of resonators R in each row and column may be the same or different.

In the embodiment of the first RF filter structure **60** shown in FIG. **33**, the first tunable RF filter path **66** includes the resonator R(**1**,**1**), the resonator R(**1**,**2**), the resonator R(**1**,**3**), and the resonator R(**1**,**4**). Furthermore, the first tunable RF filter path **66** is electrically connected between the terminal TU**1** and the terminal TANT**1**. With regard to the second tunable RF filter path **68**, the second tunable RF filter path **68** includes the resonator R(**2**,**1**), the resonator R(**2**,**2**), a resonator R(**2**,**3**), and a resonator R(**2**,**4**). Furthermore, the second tunable RF filter path **68** is electrically connected between the terminal TU**2** and the terminal TANT**2**. With regard to the third tunable RF filter path **110**, the third tunable RF filter path **110** includes the resonator R(**3**,**1**), the resonator R(**3**,**2**), a resonator R(**3**,**3**), and a resonator R(**3**,**4**). Furthermore, the third tunable RF filter path **110** is electrically connected between the terminal TU**3** and the terminal TANT**3**.

In this embodiment, the resonators R in a subset **252** of the resonators R(**1**,**1**), R(**1**,**2**) in the first tunable RF filter path **66** are weakly coupled to one another. A cross-coupling capacitive structure CS**1** is electrically connected between the resonators R(**1**,**1**), R(**1**,**2**). The cross-coupling capacitive structure CS**1** is a variable cross-coupling capacitive structure configured to vary a variable electric coupling coefficient between the resonators R(**1**,**1**), R(**1**,**2**). A subset **254** of the resonators R(**1**,**3**), and R(**1**,**4**) in the second tunable RF filter path **68** is also weakly coupled to each other. A cross-coupling capacitive structure CS**2** is electrically connected between the resonators R(**1**,**3**), R(**1**,**4**). The cross-coupling capacitive structure CS**2** is a variable cross-coupling capacitive structure configured to vary a variable electric coupling coefficient between the resonators R(**1**,**3**), R(**1**,**4**).

As shown in FIG. **33**, a unidirectional coupling stage **256** is electrically connected within the first tunable RF filter path **66**. The unidirectional coupling stage **256** defines an amplifier gain and is configured to provide amplification within the first tunable RF filter path **66** in accordance with the amplifier gain. In some embodiments, the amplifier gain of the unidirectional coupling stage **256** is a variable amplifier gain. In this embodiment, the unidirectional coupling stage **256** is electrically connected between the resonator R(**1**,**2**) and the resonator R(**1**,**3**). The variable amplifier gain can thus control a variable electric coupling coefficient between the resonator R(**1**,**2**) in the subset **252** and the resonator R(**1**,**3**) in the subset **254**. Since the unidirectional coupling stage **256** is an active semiconductor component, the unidirectional coupling stage **256** is unidirectional and thus only allows signal propagations from an input terminal IA of the unidirectional coupling stage **256** to an output terminal OA of the unidirectional coupling stage **256**. Thus, the resonator R(**1**,**2**) in the subset **252** is unidirectionally mutual electrically coupled to the resonator R(**1**,**3**) in the subset **254**.

Note that the resonators R(**1**,**3**), R(**1**,**4**) in the subset **254** are not electrically connected to the second tunable RF filter path **68** and the third tunable RF filter path **110**. As such, the unidirectional coupling stage **256** thus results in a portion of the first tunable RF filter path **66** with the subset **254** of the resonators R(**1**,**3**), R(**1**,**4**) to be unidirectional. Consequently, signal flow can be to the terminal TANT**1** but not from the terminal TANT**1**. Since the unidirectional coupling stage **256** is unidirectional, the variable amplifier gain (and thus the variable electric coupling coefficient between the resonator R(**1**,**2**) and the resonator R(**1**,**3**)) may be controlled using feed-forward control techniques and/or feedback control techniques.

Next, the resonators R in a subset **258** of the resonators R(**2**,**1**), R(**2**,**2**), R(**3**,**1**), and R(**3**,**2**) in the second tunable RF filter path **68** and in the third tunable RF filter path **110** are weakly coupled to one another. An unidirectional coupling

stage **260** is electrically connected between the first tunable RF filter path **66** and the second tunable RF filter path **68**. More specifically, the unidirectional coupling stage **260** is electrically connected between the resonator R(**1**,**1**) and the resonator R(**2**,**1**). The unidirectional coupling stage **260** defines an amplifier gain and is configured to provide amplification in accordance with the amplifier gain. In some embodiments, the amplifier gain of the unidirectional coupling stage **260** is a variable amplifier gain. The variable amplifier gain thus can control a variable electric coupling coefficient between the resonator R(**1**,**1**) in the subset **252** and the resonator R(**2**,**1**) in the subset **258**. A cross-coupling capacitive structure CS**3** is electrically connected between the resonator R(**1**,**2**) and the resonator R(**2**,**2**). The cross-coupling capacitive structure CS**3** is a variable cross-coupling capacitive structure configured to vary a variable electric coupling coefficient between the resonators R(**1**,**2**), R(**2**,**2**).

To interconnect the resonators R(**2**,**1**), R(**2**,**2**), R(**3**,**1**), and R(**3**,**2**), a set S(A) of cross-coupling capacitive structures is electrically connected between the resonators R(**2**,**1**), R(**2**,**2**), R(**3**,**1**), and R(**3**,**2**) in the subset **258**. The set S(A) of cross-coupling capacitive structures is arranged like the set S of cross-coupling capacitive structures described above with respect to FIG. **29**. Additionally, the resonators R in a subset **262** of the resonators R(**2**,**3**), R(**2**,**4**), R(**3**,**3**), and R(**3**,**4**) in the second tunable RF filter path **68** and in the third tunable RF filter path **110** are weakly coupled to one another. A set S(B) of cross-coupling capacitive structures is electrically connected between the resonators R(**2**,**3**), R(**2**,**4**), R(**3**,**3**), and R(**3**,**4**) in the subset **262**. The set S(B) of cross-coupling capacitive structures is arranged like the set S of cross-coupling capacitive structures described above with respect to FIG. **29**.

To interconnect the subset **258** and the subset **262**, the first RF filter structure **60** shown in FIG. **33** includes a cross-coupling capacitive structure CS**4** and a unidirectional coupling stage **264**. The cross-coupling capacitive structure CS**4** is electrically connected between the resonators R(**2**,**2**), R(**2**,**3**). The cross-coupling capacitive structure CS**4** is a variable cross-coupling capacitive structure configured to vary a variable electric coupling coefficient between the resonators R(**2**,**2**), R(**2**,**3**). The unidirectional coupling stage **264** is electrically connected within the third tunable RF filter path **110**. In this embodiment, the unidirectional coupling stage **264** is electrically connected between the resonator R(**3**,**3**) and the resonator R(**3**,**2**). The unidirectional coupling stage **264** defines an amplifier gain and is configured to provide amplification within the third tunable RF filter path **110** in accordance with the amplifier gain. In some embodiments, the amplifier gain of the unidirectional coupling stage **264** is a variable amplifier gain. The variable amplifier gain can thus control a variable electric coupling coefficient between the resonator R(**3**,**3**) in the subset **262** and the resonator R(**3**,**2**) in the subset **258**. Since the unidirectional coupling stage **264** is an active semiconductor component, the unidirectional coupling stage **264** is unidirectional and thus only allows signal propagations from an input terminal IB of the unidirectional coupling stage **264** to an output terminal OB of the unidirectional coupling stage **264**. Thus, the resonator R(**3**,**3**) in the subset **262** is unidirectionally mutual electrically coupled to the resonator R(**3**,**2**) in the subset **258**. Consequently, the third tunable RF filter path **110** shown in FIG. **33** is unidirectional if the signal flow is between the terminal TANT**3** and the terminal TU**3** though the third tunable RF filter path **110**. As such signal flow between the terminal TANT**3** and the terminal TU**3** is provided only through the third tunable RF filter path **110**, signal flow can only be from the terminal TANT**3** to the terminal TU**3**, and not vice versa. In other cases, an additional tunable RF signal path (e.g., the additional RF terminal tunable RF signal path that includes the resonators R(**3**,**1**), R(**2**,**2**), R(**2**,**3**) and R(**3**,**4**)) can be tuned to provide bidirectional signal flow between the terminal TU**3** and the terminal TANT**3** through the cross-coupling capacitive structure CS**4**. The unidirectional coupling stages **256**, **260**, **264** may be active devices, such as amplifiers, diodes, transistors, networks of transistors, buffer stages, attenuation stages, and the like. The unidirectional coupling stages **256**, **260**, **264** can have gains higher than one (1), lower than one (1), or equal to one (1). Additionally, the unidirectional coupling stages **256**, **260**, **264** may be passive devices. The unidirectional coupling stages **256**, **260**, **264** may not be entirely or ideally unilateral, but may have some finite reverse coupling. In this case, the unidirectional coupling stages **256**, **260**, **264** may be predominately unilateral. One example in which the unidirectional coupling stages **256**, **260**, **264** may be used for multi-resonator applications and may improve isolation between certain parts, such as transmission ports and receive ports of a duplexer.

FIG. **34** illustrates yet another embodiment of the first RF filter structure **60**. The first RF filter structure **60** shown in FIG. **34** is integrated into an IC package **266**. The first RF filter structure **60** shown in FIG. **34** includes the resonators R and is arranged as a two-dimensional matrix of the resonators R, where N is equal to three (3) and M is equal to two (2). It should be noted that in alternative embodiments the number of resonators R in each row and column may be the same or different.

In this embodiment, the first RF filter structure **60** includes an embodiment of the first tunable RF filter path **66** and an embodiment of the second tunable RF filter path **68**. The first tunable RF filter path **66** includes the resonator R(**1**,**1**), the resonator R(**1**,**2**), and the resonator R(**1**,**3**). The second tunable RF filter path **68** includes the resonator R(**2**,**1**), the resonator R(**2**,**2**), and the resonator R(**2**,**3**). A set S(X) of cross-coupling capacitive structures is electrically connected between the resonators R(**1**,**1**), R(**1**,**2**), R(**2**,**1**), and R(**2**,**2**). The set S(X) of cross-coupling capacitive structures is arranged like the set S of cross-coupling capacitive structures described above with respect to FIG. **29**. A set S(Y) of cross-coupling capacitive structures is electrically connected between the resonators R(**1**,**2**), R(**1**,**3**), R(**2**,**2**), and R(**2**,**3**). The set S(Y) of cross-coupling capacitive structures is also arranged like the set S of cross-coupling capacitive structures described above with respect to FIG. **29**.

As shown in FIG. **34**, the IC package **266** houses a package substrate **268**, a semiconductor die **270**, and a semiconductor die **272**. The semiconductor die **270** and the semiconductor die **272** are mounted on the package substrate **268**. In this embodiment, the resonators R of the first RF filter structure **60** are formed by the package substrate **268**. The set S(X) of cross-coupling capacitive structures is formed by the semiconductor die **270**. On the other hand, the set S(Y) of cross-coupling capacitive structures is formed by the semiconductor die **272**. Thus, the set S(X) of cross-coupling capacitive structures and the set S(Y) of cross-coupling capacitive structures are formed on multiple and separate semiconductor dies **270**, **272**. Using the multiple and separate semiconductor dies **270**, **272** may be helpful in order to increase isolation. The multiple and separate semiconductor dies **270**, **272** may have less area than the semi-

conductor die **268** shown in FIG. **34**. As such, the embodiment shown in FIG. **35** may consume less die area.

FIG. **35** illustrates another embodiment of an IC package **266'** that houses the same embodiment of the first RF filter structure **60** described above with regard to FIG. **34**. The IC package **266'** is the same as the IC package **266** shown in FIG. **34**, except that the IC package **266'** only has a single semiconductor die **274**. In this embodiment, both the set S(X) of cross-coupling capacitive structures and the set S(Y) of cross-coupling capacitive structures are formed by the semiconductor die **272**. Thus, the IC package **266'** allows for a more compact arrangement than the IC package **266**.

FIG. **36** illustrates yet another embodiment of the first RF filter structure **60**. In this embodiment, the first RF filter structure **60** is arranged as a three-dimensional matrix of resonators R**1**, R**2**, R**3**. More specifically, a two-dimensional matrix of the resonators R**1** is provided on a plane k, a two-dimensional array of the resonators R**2** is provided on a plane m, and a two-dimensional array of the resonators R**3** is provided on a plane n. Cross-coupling capacitive structures CC are electrically connected between the resonators R**1**, R**2**, R**3** that are adjacent to one another in the same plane k,m,n and in the different planes k,m,n. The three-dimensional matrix of resonators R**1**, R**2**, R**3** thus allows for more resonators to be cross-coupled to one another. This allows for the first RF filter structure **60** to provide greater numbers of tunable RF filter paths and allows for the first RF filter structure **60** to be tuned more accurately.

In general, having more tunable RF filter paths allows for the synthesis of a more complex transfer function with multiple notches for better blocker rejection. The number of resonators R**1**, R**2**, R**3** in each of the planes k, n, m may be different or the same. The three-dimensional matrix of resonators can be used in MIMO, SIMO, MISO, and SISO applications.

FIG. **37** shows the RF communications circuitry **54** according to one embodiment of the RF communications circuitry **54**. The RF communications circuitry **54** illustrated in FIG. **37** is similar to the RF communications circuitry **54** illustrated in FIG. **4**, except in the RF communications circuitry **54** illustrated in FIG. **37**, the RF receive circuitry **62**, the first tunable RF filter path **66**, and the second tunable RF filter path **68** are omitted. Additionally, the RF front-end circuitry **58** further includes an antenna matching filter **600**; the first RF filter structure **60** includes a first tunable RF filter **602**, which is a first tunable RF transmit filter **604** in one embodiment of the first tunable RF filter **602**; and the RF system control circuitry **56** includes a measurement-based RF spectrum profile **606**.

In one embodiment of the first RF filter structure **60**, the RF filter structure **60** includes the pair of weakly coupled resonators R(**1**,**1**), R(**1**,**2**) (FIG. **21**). Additionally, the first RF filter structure **60** includes the first connection node **70** and the first common connection node **74**. The first tunable RF filter **602** is directly coupled between the first connection node **70** and the first common connection node **74**. The antenna matching filter **600** is coupled between the first common connection node **74** and the first RF antenna **16**, such that the first tunable RF filter **602** is coupled to the first RF antenna **16** via the antenna matching filter **600**. In an alternate embodiment of the RF front-end circuitry **58**, the antenna matching filter **600** is omitted, such that the first tunable RF filter **602** is directly coupled to the first RF antenna **16**. In another embodiment of the RF front-end circuitry **58**, the antenna matching filter **600** includes both filtering circuitry and switching circuitry. In a further embodiment of the RF front-end circuitry **58**, the antenna matching filter **600** is replaced with switching circuitry (not shown).

The RF system control circuitry **56** provides a first filter control signal FCS**1** and a first filter reconfiguration signal FCS**1**R to the first tunable RF filter **602** in general, and to the first tunable RF transmit filter **604** in particular. In general, the RF communications circuitry **54** includes control circuitry **56**, **98** (FIG. **39**), which may be either the RF system control circuitry **56** or the RF front-end control circuitry **98** (FIG. **39**), that provides the first filter control signal FCS**1** and the first filter reconfiguration signal FCS**1**R. In one embodiment of the first filter control signal FCS**1**, the first filter control signal FCS**1** is based on the measurement-based RF spectrum profile **606**. In one embodiment of the first filter reconfiguration signal FCS**1**R, the first filter reconfiguration signal FCS**1**R is based on the measurement-based RF spectrum profile **606**. In an alternate embodiment of the RF communications circuitry **54**, the first filter reconfiguration signal FCS**1**R is omitted.

The RF system control circuitry **56** provides the first transmit signal TX**1** to the RF transmit circuitry **64**, which receives and processes the first transmit signal TX**1** to provide the first upstream RF transmit signal TU**1** to the first tunable RF filter **602** via the first connection node **70**. The first tunable RF transmit filter **604** receives and filters the first upstream RF transmit signal TU**1** to provide the first filtered RF transmit signal TF**1** to the antenna matching filter **600** via the first common connection node **74**.

In general, in one embodiment of the first tunable RF filter **602**, the first tunable RF filter **602** receives and filters an upstream RF signal to provide a first filtered RF signal, such that a center frequency, which is a tunable center frequency **626** (FIG. **40**B) of the first tunable RF filter **602**, is based on the first filter control signal FCS**1**. In one embodiment of the first tunable RF filter **602**, the first tunable RF filter **602** is a reconfigurable tunable RF filter **602**, such that a shape of a transfer function of the first tunable RF filter **602** is reconfigurable. As such, in one embodiment of the first tunable RF filter **602**, a configuration of the first tunable RF filter **602** is based on the first filter reconfiguration signal FCS**1**R.

FIG. **38** shows the RF communications circuitry **54** according to an alternate embodiment of the RF communications circuitry **54**. The RF communications circuitry **54** illustrated in FIG. **38** is similar to the RF communications circuitry **54** illustrated in FIG. **37**, except in the RF communications circuitry **54** illustrated in FIG. **38**; the RF transmit circuitry **64**, the antenna matching filter **600**, and the first tunable RF transmit filter **604** are omitted; and the first tunable RF filter **602** is a first tunable RF receive filter **608**. Additionally, the RF front-end circuitry **58** further includes the RF receive circuitry **62** and RF detection circuitry **610**. The RF receive circuitry **62** illustrated in FIG. **38** may be similar to the RF receive circuitry **62** illustrated in FIG. **4**. The first tunable RF filter **602** is directly coupled to the first RF antenna **16** via the first common connection node **74**.

The first tunable RF receive filter **608** receives and filters the first upstream RF receive signal RU**1** via the first RF antenna **16** to provide the first filtered RF receive signal RF**1** to the RF receive circuitry **62** and to the RF detection circuitry **610** via the first connection node **70**. The RF receive circuitry **62** receives and processes the first filtered RF receive signal RF**1** to provide the first receive signal RX**1** to the RF system control circuitry **56**. Additionally, the RF detection circuitry **610** receives and detects the first filtered

RF receive signal RF1 to provide a first detected signal DS1 to the RF system control circuitry **56**.

In one embodiment of the RF detection circuitry **610**, detection of the first filtered RF receive signal RF1 is direct RF detection, which excludes any down-conversion of the first filtered RF receive signal RF1. By using direct RF detection, artifacts created by down-conversion techniques are avoided.

In a first embodiment of the RF communications circuitry **54**, the RF communications circuitry **54** is used to create a group of measurements using at least the first detected signal DS1 to obtain a profile of an RF communications band **612** (FIG. **40**A) of interest. Therefore, the RF communications circuitry **54** operates as profiling circuitry to obtain the measurement-based RF spectrum profile **606**. As such, the measurement-based RF spectrum profile **606** is based on the group of measurements, which are based on the RF communications band **612** (FIG. **40**A). In one embodiment of the control circuitry **56**, **98** (FIG. **39**), the control circuitry **56**, **98** (FIG. **39**) constructs the measurement-based RF spectrum profile **606** based on the group of measurements. In one embodiment of the RF front-end circuitry **58**, the RF receive circuitry **62** is omitted.

In a second embodiment of the RF communications circuitry **54**, the measurement-based RF spectrum profile **606** was previously provided to the RF system control circuitry **56**, and the RF communications circuitry **54** is used to receive RF signals for normal operations, such as normal RF communications. Therefore, the RF communications circuitry **54** operates as a slave, which uses a previously defined measurement-based RF spectrum profile **606**. In one embodiment of the RF front-end circuitry **58**, the RF detection circuitry **610** is omitted.

In a third embodiment of the RF communications circuitry **54**, the RF communications circuitry **54** is used for both profiling and normal operations. As such, the control circuitry **56**, **98** (FIG. **39**) selects one of a normal operating mode and a profiling mode. During the profiling mode, the RF detection circuitry **610** provides at least the first detected signal DS1 for the group of measurements, which are used to construct the measurement-based RF spectrum profile **606**. During the normal operating mode, the first tunable RF filter **602** receives and filters the upstream RF signal to provide the first filtered RF signal for normal operations. Therefore, the RF communications circuitry **54** operates autonomously. During the profiling mode, the RF communications circuitry **54** operates as profiling circuitry to obtain the measurement-based RF spectrum profile **606**. During the normal operating mode, the RF communications circuitry **54** operates as a slave, which uses the measurement-based RF spectrum profile **606** that was obtained during the profiling mode.

In both embodiments of the first tunable RF filter **602** illustrated in FIGS. **37** and **38** in which the first tunable RF filter **602** is the first tunable RF transmit filter **604** and the first tunable RF receive filter **608**, respectively, the center frequency, which is the tunable center frequency **626** (FIG. **40**B) of the first tunable RF filter **602**, is based on the first filter control signal FCS1. Further, in one embodiment of the first tunable RF filter **602**, the first tunable RF filter **602** is the reconfigurable tunable RF filter **602**, such that the shape of the transfer function of the first tunable RF filter **602** is reconfigurable. As such, in one embodiment of the first tunable RF filter **602**, the configuration of the first tunable RF filter **602** is based on the first filter reconfiguration signal FCS1R.

FIG. **39** shows the RF communications circuitry **54** according to an additional embodiment of the RF communications circuitry **54**. The RF communications circuitry **54** illustrated in FIG. **39** is similar to the RF communications circuitry **54** illustrated in FIG. **38**, except in the RF communications circuitry **54** illustrated in FIG. **39**, the RF front-end circuitry **58** further includes the RF front-end control circuitry **98** and the first detected signal DS1 includes a first detected amplitude modulation (AM) signal AM1 and a first detected phase modulation (PM) signal PM1. In an alternate embodiment of the first detected signal DS1, the first detected PM signal PM1 is omitted.

The RF system control circuitry **56** provides the front-end control signal FEC to the RF front-end control circuitry **98**. The RF front-end control circuitry **98** provides the first filter control signal FCS1 and the first filter reconfiguration signal FCS1R to the first tunable RF filter **602** based on the front-end control signal FEC. The RF front-end control circuitry **98** provides the front-end status signal FES to the RF system control circuitry **56** based on the first detected signal DS1. As such, the control circuitry **56**, **98** includes the RF system control circuitry **56**, the RF front-end control circuitry **98**, or both.

In one embodiment of the RF detection circuitry **610**, the detection of the first filtered RF receive signal RF1 includes AM detection, such that the first detected AM signal AM1 is based on the AM detection. In one embodiment of the measurement-based RF spectrum profile **606**, the measurement-based RF spectrum profile **606** is based on at least the first detected AM signal AM1.

In an alternate embodiment of the RF detection circuitry **610**, the detection of the first filtered RF receive signal RF1 includes both AM detection and PM detection, such that the first detected AM signal AM1 is based on the AM detection and the first detected PM signal PM1 is based on the PM detection. In one embodiment of the measurement-based RF spectrum profile **606**, the measurement-based RF spectrum profile **606** is based on at least the first detected AM signal AM1 and the first detected PM signal PM1.

FIG. **40**A is a graph illustrating a profile of an RF communications band **612** of interest according to one embodiment of the RF communications band **612**. The RF communications band **612** includes a group of active RF signals **614**, such that each of the group of active RF signals **614** has a corresponding center frequency **616**. FIG. **40**B is a graph illustrating a first bandpass filter response **624** of the first tunable RF receive filter **608** (FIG. **39**) according to one embodiment of the first tunable RF receive filter **608** (FIG. **39**). The first tunable RF receive filter **608** (FIG. **39**) has a tunable center frequency **626**.

In one embodiment of the RF communications circuitry **54** (FIG. **39**), the first tunable RF receive filter **608** (FIG. **39**) is used to measure and profile the RF communications band **612** by identifying the active RF signals **614** in the RF communications band **612**. The profile is used to develop the measurement-based RF spectrum profile **606** (FIG. **39**) of the RF communications band **612**. The active RF signals **614** may be blocking signals in some RF communications systems and desired signals in other RF communications systems. The measurement-based RF spectrum profile **606** (FIG. **39**) may be used to help reject the blocking signals and accept the desired signals.

In this regard, in one embodiment of the control circuitry **56**, **98** (FIG. **39**), as previously mentioned, the control circuitry **56**, **98** (FIG. **39**) constructs the measurement-based RF spectrum profile **606** (FIG. **39**) based on the group of measurements, which may be obtained by adjusting the

tunable center frequency **626** for each measurement until the entire RF communications band **612** has been profiled. As such, in one embodiment of the control circuitry **56**, **98** (FIG. **39**), at least a portion of the group of measurements is associated with at least a portion of the group of active RF signals **614**.

In one embodiment of the RF communications band **612**, the group of active RF signals **614** includes a pair of somewhat adjacent weak blockers **618**, a pair of adjacent strong blockers **620**, and a one-sided strong blocker **622**. Therefore, the tunable center frequency **626** of the first tunable RF receive filter **608** (FIG. **39**), the configuration of the first tunable RF receive filter **608** (FIG. **39**), or both may need to be adjusted based on a distribution of the active RF signals **614**.

FIG. **41**A is a graph illustrating the first bandpass filter response **624** and a second bandpass filter response **628** of the first tunable RF receive filter **608** shown in FIG. **38** according to one embodiment of the first tunable RF receive filter **608**. In general, in one embodiment of the first tunable RF filter **602** (FIG. **38**), the first tunable RF filter **602** (FIG. **38**) has either a first configuration or a second configuration based on the first filter reconfiguration signal FCS**1**R (FIG. **38**). During the first configuration, the first tunable RF filter **602** (FIG. **38**) has the first bandpass filter response **624**, and during the second configuration, the first tunable RF filter **602** (FIG. **38**) has the second bandpass filter response **628**. An order of the first tunable RF filter **602** (FIG. **38**) is higher during the second configuration than during the first configuration.

A bandwidth of the second bandpass filter response **628** is narrower than a bandwidth of the first bandpass filter response **624**, as shown in FIG. **41**A. As such, the first bandpass filter response **624** may have a lower slope away from the tunable center frequency **626** than the second bandpass filter response **628**. Additionally, in the second bandpass filter response **628**, insertion loss increases more rapidly as the frequency moves away from the tunable center frequency **626** than the second bandpass filter response **628**. However, the second bandpass filter response **628** has increased insertion loss **630** toward the tunable center frequency **626** when compared to the first bandpass filter response **624**. Therefore, the first configuration may be used when blockers are not close to the tunable center frequency **626**. However, the second configuration may be used when blockers are somewhat close to the tunable center frequency **626**, such as when the tunable center frequency **626** is between the somewhat adjacent weak blockers **618** (FIG. **40**A).

FIG. **41**B is a graph illustrating the first bandpass filter response **624** and a third bandpass filter response **632** of the first tunable RF receive filter **608** shown in FIG. **38** according to one embodiment of the first tunable RF receive filter **608**. The first bandpass filter response **624** is shown for comparison purposes. In general, in one embodiment of the first tunable RF filter **602** (FIG. **38**), the first tunable RF filter **602** (FIG. **38**) has the third bandpass filter response **632** based on the first filter reconfiguration signal FCS**1**R (FIG. **38**). The third bandpass filter response **632** includes a left-side notch filter response **634** and a right-side notch filter response **636**. As such, the left-side notch filter response **634** has a tunable left-side notch frequency **638** and the right-side notch filter response **636** has a tunable right-side notch frequency **640**.

A bandwidth of the third bandpass filter response **632** is narrower than the bandwidth of the first bandpass filter response **624**, as shown in FIG. **41**B. However, the third bandpass filter response **632** has further increased insertion loss **642** toward the tunable center frequency **626** when compared to the first bandpass filter response **624**. In this regard, the third bandpass filter response **632** may be used when blockers are strong, close to the tunable center frequency **626**, or both, such as when the tunable center frequency **626** is between the adjacent strong blockers **620** (FIG. **40**A).

In an alternate embodiment of the first tunable RF filter **602** (FIG. **38**), the first tunable RF filter **602** (FIG. **38**) has the third bandpass filter response **632** based on the first filter reconfiguration signal FCS**1**R (FIG. **38**), except that either the left-side notch filter response **634** or the right-side notch filter response **636** is omitted. As such, the first tunable RF filter **602** (FIG. **38**) has a bandpass filter response with a side notch filter response. In this regard, the bandpass filter response with a side notch filter response may be used when a strong blocker on one side is close, such as when the tunable center frequency **626** is close to the one-sided strong blocker **622** (FIG. **40**A). Specifically, in one embodiment of the third bandpass filter response **632**, the right-side notch filter response **636** is omitted, such that the third bandpass filter response **632** has the left-side notch filter response **634** and not the right-side notch filter response **636**. Conversely, in an alternate embodiment of the third bandpass filter response **632**, the left-side notch filter response **634** is omitted, such that the third bandpass filter response **632** has the right-side notch filter response **636** and not the left-side notch filter response **634**.

FIG. **42** shows the RF communications circuitry **54** according to an alternate embodiment of the RF communications circuitry **54**. The RF communications circuitry **54** illustrated in FIG. **42** is similar to the RF communications circuitry **54** illustrated in FIG. **37**, except in the RF communications circuitry **54** illustrated in FIG. **42**, the antenna matching filter **600** is omitted, the RF front-end circuitry **58** further includes the RF receive circuitry **62**, and the first RF filter structure **60** further includes a second tunable RF filter **644**. The first tunable RF filter **602** is directly coupled to the first RF antenna **16** via the first common connection node **74**, and the second tunable RF filter **644** is directly coupled to the first RF antenna **16** via the first common connection node **74**. In one embodiment of the second tunable RF filter **644**, the second tunable RF filter **644** is the first tunable RF receive filter **608**.

The first tunable RF receive filter **608** receives and filters a first upstream RF receive signal via the first RF antenna **16** to provide the first filtered RF receive signal RF**1** to the RF receive circuitry **62** via the second connection node **72**. The RF receive circuitry **62** receives and processes the first filtered RF receive signal RF**1** to provide the first receive signal RX**1** to the RF system control circuitry **56**.

The RF system control circuitry **56** provides a second filter control signal FCS**2** and a second filter reconfiguration signal FCS**2**R to the second tunable RF filter **644** in general, and to the first tunable RF receive filter **608** in particular. In one embodiment of the second filter control signal FCS**2**, the second filter control signal FCS**2** is based on the measurement-based RF spectrum profile **606**. In one embodiment of the second filter reconfiguration signal FCS**2**R, the second filter reconfiguration signal FCS**2**R is based on the measurement-based RF spectrum profile **606**. In an alternate embodiment of the RF communications circuitry **54**, the second filter reconfiguration signal FCS**2**R is omitted.

In general, in one embodiment of the second tunable RF filter **644**, the second tunable RF filter **644** receives and filters an upstream RF signal to provide a first filtered RF

signal, such that a center frequency, which is a tunable center frequency of the second tunable RF filter **644**, is based on the second filter control signal FCS**2**. In one embodiment of the second tunable RF filter **644**, the second tunable RF filter **644** is a reconfigurable tunable RF filter **644**, such that a shape of a transfer function of the second tunable RF filter **644** is reconfigurable. As such, in one embodiment of the second tunable RF filter **644**, a configuration of the second tunable RF filter **644** is based on the second filter reconfiguration signal FCS**2**R.

In one embodiment of the RF communications circuitry **54**, the measurement-based RF spectrum profile **606** was previously provided to the RF system control circuitry **56**, and the RF communications circuitry **54** is used to receive RF signals and transmit RF signals for normal operations, such as normal RF communications using the measurement-based RF spectrum profile **606**.

FIG. **43** shows the RF communications circuitry **54** according to an alternate embodiment of the RF communications circuitry **54**. The RF communications circuitry **54** illustrated in FIG. **43** is similar to the RF communications circuitry **54** illustrated in FIG. **42**, except in the RF communications circuitry **54** illustrated in FIG. **43**, the RF front-end circuitry **58** further includes the second RF filter structure **120**, such that the second tunable RF filter **644** is omitted from the first RF filter structure **60** and then added to the second RF filter structure **120**.

FIG. **44** shows the RF communications circuitry **54** according to an additional embodiment of the RF communications circuitry **54**. The RF communications circuitry **54** illustrated in FIG. **44** is similar to the RF communications circuitry **54** illustrated in FIG. **38**, except in the RF communications circuitry **54** illustrated in FIG. **44**, the RF receive circuitry **62** is omitted and the first RF filter structure **60** further includes the second tunable RF filter **644** and up to and including an N^{TH} tunable RF filter **646**. Also, the first RF filter structure **60** further includes up to and including an N^{TH} connection node **648**. In one embodiment of the second tunable RF filter **644** and the second tunable RF receive filter **650**, the second tunable RF filter **644** is a second tunable RF receive filter **650** and the N^{TH} tunable RF filter **646** is an N^{TH} tunable RF receive filter **652**.

The RF detection circuitry **610** provides the first detected signal DS**1**, a second detected signal DS**2**, and an N^{TH} detected signal DSN to the RF system control circuitry **56** based on receiving and detecting the first filtered RF receive signal RF**1**, the second filtered RF receive signal RF**2** and up to and including an N^{TH} filtered RF receive signal RFN. The RF system control circuitry **56** provides the first filter control signal FCS**1**, the second filter control signal FCS**2**, and up to and including an N^{TH} filter control signal FCSN to the RF detection circuitry **610**. Additionally, the RF system control circuitry **56** provides the first filter reconfiguration signal FCS**1**R, the second filter reconfiguration signal FCS**2**R, and up to and including an N^{TH} filter reconfiguration signal FCSNR to the RF front-end circuitry **58**.

In general, the first RF filter structure **60** includes a group of tunable RF filters **602**, **644**, **646** and a group of connection nodes **70**, **72**, **648**. The RF system control circuitry **56** provides a group of filter control signals FCS**1**, FCS**2**, FCSN to the group of tunable RF filters **602**, **644**, **646** to tune the group of tunable RF filters **602**, **644**, **646**. Additionally, the RF system control circuitry **56** provides a group of filter reconfiguration signals FCS**1**R, FCS**2**R, FCSNR to configure the group of tunable RF filters **602**, **644**, **646**. The group of tunable RF filters **602**, **644**, **646** provides a group of filtered RF signals RF**1**, RF**2**, RFN to the RF detection circuitry **610** via the group of connection nodes **70**, **72**, **648**. The RF detection circuitry **610** receives and detects the group of filtered RF signals RF**1**, RF**2**, RFN to provide a group of detected signals DS**1**, DS**2**, DSN. The measurement-based RF spectrum profile **606** is based on a group of measurements using the group of detected signals DS**1**, DS**2**, DSN. In one embodiment of the RF detection circuitry **610**, the RF detection circuitry **610** includes multiple AM detectors (not shown) and multiple PM detectors (not shown), such that each of the group of detected signals DS**1**, DS**2**, DSN has a corresponding detected AM signal and a corresponding detected PM signal.

FIG. **45** shows the RF communications circuitry **54** according to another embodiment of the RF communications circuitry **54**. The RF communications circuitry **54** illustrated in FIG. **45** is similar to the RF communications circuitry **54** illustrated in FIG. **43**, except in the RF communications circuitry **54** illustrated in FIG. **45**, the RF front-end circuitry **58** further includes the RF front-end control circuitry **98**.

The RF front-end control circuitry **98** provides the first calibration control signal CCS**1** and up to and including the N^{TH} calibration control signal CCSN to the first RF filter structure **60**. The RF front-end control circuitry **98** provides the P^{TH} calibration control signal CCSP and up to and including the X^{TH} calibration control signal CCSX to the second RF filter structure **120**. Details of the first RF filter structure **60** and the second RF filter structure **120** are not shown to simplify FIG. **45**.

The first RF filter structure **60** provides the first calibration status signal CSS**1** and up to and including the Q^{TH} calibration status signal CSSQ to the RF front-end control circuitry **98**. The second RF filter structure **120** provides the R^{TH} calibration status signal CSSR and up to and including the Y^{TH} calibration status signal CSSY to the RF front-end control circuitry **98**. In an alternate embodiment of the RF front-end circuitry **58**, any or all of the N^{TH} calibration control signal CCSN, the Q^{TH} calibration status signal CSSQ, the X^{TH} calibration control signal CCSX, and the Y^{TH} calibration status signal CSSY are omitted.

In one embodiment of the RF front-end circuitry **58**, the RF front-end circuitry **58** operates in one of a normal operating mode and a calibration mode. During the calibration mode, the RF front-end control circuitry **98** performs a calibration of the first RF filter structure **60**, the second RF filter structure **120**, or both. As such, the RF front-end control circuitry **98** provides any or all of the filter control signals FCS**1**, FCS**2**, any or all of the filter reconfiguration signals FCS**1**R, FCS**2**R, and any or all of the calibration control signals CCS**1**, CCSN, CCSP, CCSX needed for calibration. Further, the RF front-end control circuitry **98** receives any or all of the calibration status signals CSS**1**, CSSQ, CSSR, CSSY needed for calibration.

During the normal operating mode, the RF front-end control circuitry **98** provides any or all of the filter control signals FCS**1**, FCS**2**, any or all of the filter reconfiguration signals FCS**1**R, FCS**2**R, and any or all of the calibration control signals CCS**1**, CCSN, CCSP, CCSX needed for normal operation. Further, the RF front-end control circuitry **98** receives any or all of the calibration status signals CSS**1**, CSSQ, CSSR, CSSY needed for normal operation. Any or all of the calibration control signals CCS**1**, CCSN, CCSP, CCSX may be based on the front-end control signal FEC. The front-end status signal FES may be based on any or all of the calibration status signals CSS**1**, CSSQ, CSSR, CSSY. Further, during the normal operating mode, the RF front-end circuitry **58** processes signals as needed for normal opera-

tion. Other embodiments described in the present disclosure may be associated with normal operation.

FIG. **46** shows the first RF filter structure **60** shown in FIG. **45** according to one embodiment of the first RF filter structure **60**. The first RF filter structure **60** includes the first tunable RF filter **602** and RF filter tuning, configuration, and calibration circuitry **654**. The RF filter tuning, configuration, and calibration circuitry **654** is used to facilitate tuning, configuration, and calibration of the first tunable RF filter **602**. As such, the RF filter tuning, configuration, and calibration circuitry **654** receives the first filter control signal FCS**1** and the first filter reconfiguration signal FCS**1**R. The RF filter tuning, configuration, and calibration circuitry **654** further receives the first calibration control signal CCS**1** and up to and including the N^{TH} calibration control signal CCSN. The RF filter tuning, configuration, and calibration circuitry **654** provides the first calibration status signal CSS**1** and up to and including the Q^{TH} calibration status signal CSSQ.

The first tunable RF filter **602** includes a first resonator **656**, a second resonator **658**, a third resonator **660**, a fourth resonator **662**, a first coupling circuit **664**, a second coupling circuit **666**, a third coupling circuit **668**, a fourth coupling circuit **670**, and a fifth coupling circuit **672**. The first resonator **656** is coupled to the first connection node **70** and the second resonator **658** is coupled to the first common connection node **74**. In general, the first filter control signal FCS**1** is used to tune center frequencies of the resonators **656**, **658**, **660**, **662** and the first filter reconfiguration signal FCS**1**R is used to configure the coupling circuits **664**, **666**, **668**, **670**, **672** to provide connectivity between the resonators **656**, **658**, **660**, **662**.

In one embodiment of the coupling circuits **664**, **666**, **668**, **670**, **672**, each of the coupling circuits **664**, **666**, **668**, **670**, **672** may be configured to provide no connectivity or a configurable magnitude of connectivity between two of the resonators **656**, **658**, **660**, **662**. Further, in one embodiment of the coupling circuits **664**, **666**, **668**, **670**, **672**, each of the coupling circuits **664**, **666**, **668**, **670**, **672** may be configured to provide either additive or subtractive connectivity between two of the resonators **656**, **658**, **660**, **662**. In the embodiments that follow, unless stated otherwise, each of the coupling circuits **664**, **666**, **668**, **670**, **672** provides no connectivity between the resonators **656**, **658**, **660**, **662**.

In a first embodiment of the first tunable RF filter **602**, the first tunable RF filter **602** has a first configuration based on the first filter reconfiguration signal FCS**1**R, as illustrated in FIG. **46**. In the first configuration, the first coupling circuit **664** is configured to couple the first resonator **656** to the second resonator **658**, thereby providing a first reconfigurable RF filter path **674** between the first connection node **70** and the first common connection node **74** via the first resonator **656**, the first coupling circuit **664**, and the second resonator **658**. A first group of resonators includes the first resonator **656** and the second resonator **658**. Therefore, the first group of resonators includes two resonators. In this regard, during the first configuration, the first group of resonators are coupled in series between the first connection node **70** and the first common connection node **74**.

FIG. **47** shows the first RF filter structure **60** shown in FIG. **45** according to an alternate embodiment of the first RF filter structure **60**. The first RF filter structure **60** illustrated in FIG. **47** is similar to the first RF filter structure **60** illustrated in FIG. **46**, except in the first RF filter structure **60** illustrated in FIG. **47**, the first tunable RF filter **602** has a second configuration instead of the first configuration.

As such, in a second embodiment of the first tunable RF filter **602**, the first tunable RF filter **602** has the second configuration based on the first filter reconfiguration signal FCS**1**R, as illustrated in FIG. **47**. In the second configuration, the first coupling circuit **664** provides no connectivity, the second coupling circuit **666** is configured to couple the first resonator **656** to the third resonator **660**, and the third coupling circuit **668** is configured to couple the third resonator **660** to the second resonator **658**, thereby providing a second reconfigurable RF filter path **676** between the first connection node **70** and the first common connection node **74** via the first resonator **656**, the second coupling circuit **666**, the third resonator **660**, the third coupling circuit **668**, and the second resonator **658**. A second group of resonators includes the first resonator **656**, the second resonator **658**, and the third resonator **660**. Therefore, the second group of resonators includes three resonators. A first group of coupling circuits includes the second coupling circuit **666** and the third coupling circuit **668**. In this regard, during the second configuration, the second group of resonators and the first group of coupling circuits are coupled in series between the first connection node **70** and the first common connection node **74**.

The first tunable RF filter **602** illustrated in FIGS. **46** and **47** has a bandpass filter response. However, since the second group of resonators has more resonators than the first group of resonators, an order of the first tunable RF filter **602** is higher during the second configuration than during the first configuration. Further, during both the first configuration and the second configuration, the first tunable RF filter **602** has a single path between the first connection node **70** and the first common connection node **74**.

FIG. **48** shows the first RF filter structure **60** shown in FIG. **45** according to an additional embodiment of the first RF filter structure **60**. The first tunable RF filter **602** illustrated in FIG. **48** combines the first configuration and the second configuration illustrated in FIGS. **46** and **47**, respectively. As such, the first tunable RF filter **602** illustrated in FIG. **48** includes the first reconfigurable RF filter path **674** and the second reconfigurable RF filter path **676**. As such, the first reconfigurable RF filter path **674** and the second reconfigurable RF filter path **676** share at least one resonator. Further, the first tunable RF filter **602** includes the first group of resonators and the second group of resonators, such that the first group of resonators is not identical to the second group of resonators. By combining the first reconfigurable RF filter path **674** and the second reconfigurable RF filter path **676**, the first tunable RF filter **602** illustrated in FIG. **48** has a bandpass filter response with a side notch filter response.

FIG. **49** shows the first RF filter structure **60** shown in FIG. **45** according to another embodiment of the first RF filter structure **60**. The first tunable RF filter **602** illustrated in FIG. **49** combines the first reconfigurable RF filter path **674** and the second reconfigurable RF filter path **676** illustrated in FIG. **48** with a third reconfigurable RF filter path **678**. As such, in a third embodiment of the first tunable RF filter **602**, the first tunable RF filter **602** has a third configuration based on the first filter reconfiguration signal FCS**1**R, as illustrated in FIG. **49**. In the third configuration, the first reconfigurable RF filter path **674**, the second reconfigurable RF filter path **676**, and the third reconfigurable RF filter path **678** are provided.

In the third reconfigurable RF filter path **678**, the fourth coupling circuit **670** is configured to couple the first resonator **656** to the fourth resonator **662**, and the fifth coupling circuit **672** is configured to couple the fourth resonator **662**

to the second resonator **658**, thereby providing the third reconfigurable RF filter path **678** between the first connection node **70** and the first common connection node **74** via the first resonator **656**, the fourth coupling circuit **670**, the fourth resonator **662**, the fifth coupling circuit **672**, and the second resonator **658**. A third group of resonators includes the first resonator **656**, the second resonator **658**, and the fourth resonator **662**.

As such, the first reconfigurable RF filter path **674**, the second reconfigurable RF filter path **676**, and the third reconfigurable RF filter path **678** share at least one resonator. Further, the first tunable RF filter **602** includes the first group of resonators, the second group of resonators, and the third group of resonators, such that the first group of resonators is not identical to the second group of resonators, the second group of resonators is not identical to the third group of resonators, and the first group of resonators is not identical to the third group of resonators. By combining the first reconfigurable RF filter path **674**, the second reconfigurable RF filter path **676**, and the third reconfigurable RF filter path **678**, the first tunable RF filter **602** illustrated in FIG. **49** has a bandpass filter response with a left-side notch filter response and a right-side notch filter response.

FIG. **50** shows one embodiment of the RF communications circuitry **54** and alternate RF communications circuitry **680**. The RF communications circuitry **54** includes the control circuitry **56**, **98** (FIG. **39**), which includes the measurement-based RF spectrum profile **606**. The measurement-based RF spectrum profile **606** may be useful for configuration of other RF communications systems. As such, the RF communications circuitry **54** provides the measurement-based RF spectrum profile **606** to the alternate RF communications circuitry **680** via an information transfer system **682**. The information transfer system **682** may be manual or automated and may include any combination of analog circuitry, digital circuitry, wireless circuitry, communications circuitry, data storage circuitry, the like, or any combination thereof.

FIG. **51** shows an electronics apparatus **700** according to one embodiment of the electronics apparatus **700**. Many electronics systems may have complex nonlinear capacitance effects. Such effects may be non-correlated or weakly correlated, thereby degrading performance of such electronics systems. Embodiments of the present disclosure present techniques for mitigating such effects.

The electronics apparatus **700** includes a first electronic device **702**; nonlinear capacitance compensation circuitry **704**, which includes a first nonlinear capacitance compensation circuit **706** and a capacitance compensation control circuit **708**; a first sensor **710**, and a first replica circuit **712**. In an alternate embodiment of the electronics apparatus **700**, either or both of the first sensor **710** and the first replica circuit **712** may be omitted.

The first electronic device **702** has a first nonlinear capacitance CN, which has at least one nonlinearity that may adversely affect behavior of the first electronic device **702**. The first nonlinear capacitance compensation circuit **706** has a first compensation capacitance CC. The first electronic device **702** is coupled to the first nonlinear capacitance compensation circuit **706**. In one embodiment of the first electronic device **702** and the first nonlinear capacitance compensation circuit **706**, the first electronic device **702** is coupled to the first nonlinear capacitance compensation circuit **706** using differential coupling as shown. In an alternate embodiment of the first electronic device **702** and the first nonlinear capacitance compensation circuit **706**, the first electronic device **702** is coupled to the first nonlinear capacitance compensation circuit **706** using a single-ended coupling as shown in FIG. **52**. The first compensation capacitance CC is used to at least partially linearize the first nonlinear capacitance CN.

The capacitance compensation control circuit **708** receives a first status signal SS**1**, which is representative of a cause of nonlinearity of the first nonlinear capacitance CN. The first status signal SS**1** may be provided by internal circuitry in the first electronic device **702**, by signals that are external to the first electronic device **702**, or by the coupling between the first electronic device **702** and the first nonlinear capacitance compensation circuit **706**. As such, the first status signal SS**1** may be a differential signal, a single-ended signal, or any type of signal that is representative of a cause of nonlinearity of the first nonlinear capacitance CN.

The capacitance compensation control circuit **708** provides a first compensation control signal SC**1** to the first nonlinear capacitance compensation circuit **706**. As such, in one embodiment of the electronics apparatus **700**, the first electronic device **702** has the first nonlinear capacitance CN and is coupled to the first nonlinear capacitance compensation circuit **706**. The first nonlinear capacitance compensation circuit **706** has the first compensation capacitance CC and receives the first compensation control signal SC**1**. The capacitance compensation control circuit **708** adjusts the first compensation capacitance CC using the first compensation control signal SC**1** to at least partially linearize the first nonlinear capacitance CN. In one embodiment of the capacitance compensation control circuit **708**, the capacitance compensation control circuit **708** adjusts the first compensation capacitance CC using the first compensation control signal SC**1** to substantially linearize the first nonlinear capacitance CN.

The first sensor **710** provides a first sensor signal SN**1** to the capacitance compensation control circuit **708**. The first replica circuit **712** provides a first replica signal SR**1** to the capacitance compensation control circuit **708**. The capacitance compensation control circuit **708** receives system information SIN from one or more other sources (not shown). In this regard, any or all of the first sensor signal SN**1**, the first replica signal SR**1**, and the system information SIN may provide at least a first system factor to the capacitance compensation control circuit **708**.

In this regard, in one embodiment of the electronics apparatus **700** at least the first system factor, the first status signal SS**1**, or both are representative of a cause of nonlinearity of the first nonlinear capacitance CN. Therefore, in general, the capacitance compensation control circuit **708** adjusts the first compensation capacitance CC using the first compensation control signal SC**1** to at least partially linearize the first nonlinear capacitance CN based on at least the first system factor, the first status signal SS**1**, or both.

In one embodiment of the electronics apparatus **700**, the first sensor **710** is used to sense at least one parameter in the electronics apparatus **700** that is representative of one or more system factors, which may include the first system factor. As such, in one embodiment of the first sensor **710**, the first system factor is based on the first sensor **710**. The first replica circuit **712** is used to replicate at least one circuit in the electronics apparatus **700** that is representative of one or more system factors, which may include the first system factor. In one embodiment of the first replica circuit **712**, the first system factor is based on the first replica circuit **712**.

In one embodiment of at least the first system factor, at least the first system factor includes temperature of the electronics apparatus **700**, manufacturing process related variations of the electronics apparatus **700**, one or more

nonlinear parasitic element of the electronics apparatus **700**, one or more nonlinear substrate element of the electronics apparatus **700**, one or more power supply voltage of the electronics apparatus **700**, one or more power supply current of the electronics apparatus **700**, one or more signal amplitude of the electronics apparatus **700**, one or more signal frequency of the electronics apparatus **700**, operating frequency band of the electronics apparatus **700**, operating communications standard, modulation technique of the electronics apparatus **700**, the like, or any combination thereof.

In alternate embodiments of the electronics apparatus **700**, either the first sensor **710**, the first replica circuit **712**, or both are omitted. In alternate embodiments of the electronics apparatus **700**, any or all of the first status signal SS**1**, the first replica signal SR**1**, the system information SIN, and the first sensor signal SN**1** are omitted.

FIG. **52** shows the electronics apparatus **700** according to an alternate embodiment of the electronics apparatus **700**. The electronics apparatus **700** illustrated in FIG. **52** is similar to the electronics apparatus **700** illustrated in FIG. **51**, except in the electronics apparatus **700** illustrated in FIG. **52**, the first electronic device **702** is coupled to the first nonlinear capacitance compensation circuit **706** using a single-ended coupling instead of a differential coupling, and the first status signal SS**1** is taken from the coupling between the first electronic device **702** to the first nonlinear capacitance compensation circuit **706** that is inside the nonlinear capacitance compensation circuitry **704**. Additionally, the first electronic device **702** receives an input signal VIN.

FIGS. **53**A, **53**B, and **53**C are graphs illustrated relationships between the input signal VIN and a linear capacitance CL, the input signal VIN and the first nonlinear capacitance CN, and the input signal VIN and the first compensation capacitance CC, respectively. From FIG. **53**A, as the input signal VIN varies above and below a bias point **714**, the linear capacitance CL varies in a linear manner. Even though the linear capacitance CL is not constant as the input signal VIN varies, since the capacitance variation is linear, many circuits will have well-behaved performance. For example, effects caused by voltages above the bias point **714** will largely be cancelled by effects caused below the bias point **714**.

However, in FIG. **53**B, as the input signal VIN varies above and below the bias point **714**, the first nonlinear capacitance CN varies in a nonlinear manner. As such, effects caused by voltages above the bias point **714** will not be cancelled by effects caused below the bias point **714**. As such, this nonlinearity may cause problems in certain circuits.

In FIG. **53**C, as the input signal VIN varies above and below the bias point **714**, the first compensation capacitance CC also varies in a nonlinear manner. However, the first nonlinear capacitance CN in FIG. **53**B curves upward at high magnitudes of the input signal VIN, whereas the first compensation capacitance CC in FIG. **53**C curves downward at high magnitudes of the input signal VIN.

Therefore, by using the first compensation capacitance CC to at least partially linearize the first nonlinear capacitance CN, a combination of the first nonlinear capacitance CN and the first compensation capacitance CC produces a net response that is closer to the response of the linear capacitance CL.

The response of the first nonlinear capacitance CN is only nonlinear in the area at the right of FIG. **53**B. In general, the first nonlinear capacitance CN may be linear in some areas and nonlinear in others. Therefore, in one embodiment of the capacitance compensation control circuit **708** (FIG. **1**), the capacitance compensation control circuit **708** (FIG. **1**) adjusts the first compensation capacitance CC based on a piece-wise function.

FIG. **54** shows the electronics apparatus **700** according to one embodiment of the electronics apparatus **700**. The electronics apparatus **700** illustrated in FIG. **54** includes the nonlinear capacitance compensation circuitry **704** and the first electronic device **702**, which is an RF amplifier **716**. The RF amplifier **716** receives and amplifies an input signal VIN to provide an output signal VOUT. The nonlinear capacitance compensation circuitry **704** is coupled to an output from the RF amplifier **716**. The RF amplifier **716** has an amplifier output capacitance CNA, which is presented to the output from the RF amplifier **716**. As such, the first nonlinear capacitance CN is the amplifier output capacitance CNA.

In one embodiment of the RF amplifier **716**, the RF amplifier **716** is a power amplifier. In one embodiment of the RF amplifier **716**, the RF amplifier **716** is a low noise amplifier. In one embodiment of the RF amplifier **716**, the RF amplifier **716** is a complementary metal-oxide-semiconductor (CMOS) amplifier. In one embodiment of the RF amplifier **716**, the RF amplifier **716** is a silicon-on-insulator (SOI) amplifier.

FIG. **55**A shows the electronics apparatus **700** according to an alternate embodiment of the electronics apparatus **700**. The electronics apparatus **700** illustrated in FIG. **55**A includes the nonlinear capacitance compensation circuitry **704** and the first electronic device **702**, which is an RF filter **718**. The RF filter **718** receives and filters an input signal VIN to provide an output signal VOUT. The nonlinear capacitance compensation circuitry **704** is coupled to the RF filter **718**. The RF filter **718** has an RF filter capacitance CNF. As such, the first nonlinear capacitance CN is the RF filter capacitance CNF.

FIG. **55**B shows the electronics apparatus **700** according to an additional embodiment of the electronics apparatus **700**. The electronics apparatus **700** illustrated in FIG. **55**B includes the nonlinear capacitance compensation circuitry **704** and the first electronic device **702**, which is an RF oscillator **720**. The RF oscillator **720** provides an output signal VOUT. The nonlinear capacitance compensation circuitry **704** is coupled to the RF oscillator **720**. The RF oscillator **720** has an RF oscillator capacitance CNO. As such, the first nonlinear capacitance CN is the RF oscillator capacitance CNO.

In one embodiment of the electronics apparatus **700**, the capacitance compensation control circuit **708** adjusts the first compensation capacitance CC (FIG. **2**) to reduce frequency error in the RF oscillator **720** using the first compensation control signal SC**1** (FIG. **2**). In one embodiment of the electronics apparatus **700**, the capacitance compensation control circuit **708** adjusts the first compensation capacitance CC (FIG. **2**) to reduce phase noise in the RF oscillator **720** using the first compensation control signal SC**1** (FIG. **2**).

FIG. **56** shows the electronics apparatus **700** according to one embodiment of the electronics apparatus **700**. The electronics apparatus **700** illustrated in FIG. **56** includes the nonlinear capacitance compensation circuitry **704** and the first electronic device **702**, which is a first RF switch **722**. The nonlinear capacitance compensation circuitry **704** is coupled across the first RF switch **722**. When the first RF switch **722** is in an OFF state, as shown in FIG. **56**, the first RF switch **722** has an OFF state capacitance CFS, which is presented across the first RF switch **722**. As such, the first nonlinear capacitance CN is the OFF state capacitance CFS.

FIG. **57** shows the electronics apparatus **700** according to an alternate embodiment of the electronics apparatus **700**. The electronics apparatus **700** illustrated in FIG. **57** includes the nonlinear capacitance compensation circuitry **704** and the first electronic device **702**, which is the first RF switch **722**. The nonlinear capacitance compensation circuitry **704** is coupled across the first RF switch **722**. When the first RF switch **722** is in an ON state, as shown in FIG. **57**, the first RF switch **722** has an ON state capacitance COS, which is presented across the first RF switch **722**. As such, the first nonlinear capacitance CN is ON state capacitance COS.

FIG. **58** shows the electronics apparatus **700** according to an additional embodiment of the electronics apparatus **700**. The electronics apparatus **700** illustrated in FIG. **58** is similar to the electronics apparatus **700** illustrated in FIG. **56**, except in the electronics apparatus **700** illustrated in FIG. **58**, the electronics apparatus **700** further includes a first capacitive element **724** coupled to the first RF switch **722**.

FIG. **59** shows the electronics apparatus **700** according to one embodiment of the electronics apparatus **700**. The electronics apparatus **700** illustrated in FIG. **59** is similar to the electronics apparatus **700** illustrated in FIG. **56**, except in the electronics apparatus **700** illustrated in FIG. **59**, the first RF switch **722** is a MOS transistor element **726**. The MOS transistor element **726** has a drain **728**, a source **730**, and a body **732**. The MOS transistor element **726** has a drain-to-source capacitance CDS between the drain **728** and the source **730**. As such, the first nonlinear capacitance CN is the drain-to-source capacitance CDS. Therefore, the nonlinear capacitance compensation circuitry **704** is coupled between the drain **728** and the source **730**.

FIG. **60** shows the electronics apparatus **700** according to an alternate embodiment of the electronics apparatus **700**. The electronics apparatus **700** illustrated in FIG. **60** is similar to the electronics apparatus **700** illustrated in FIG. **51**, except in the electronics apparatus **700** illustrated in FIG. **60**, the first sensor **710**, the first replica circuit **712**, the system information SIN, and the first status signal SS**1** are not shown to simplify FIG. **60**. Embodiments of the electronics apparatus **700** illustrated in FIG. **60** may include any or all of the first sensor **710**, the first replica circuit **712**, the system information SIN, and the first status signal SS**1** even though they are not shown.

The first electronic device **702** further has a second nonlinear capacitance CN**2**. The first nonlinear capacitance compensation circuit **706** further has a second compensation capacitance CC**2**. The first electronic device **702** is further coupled to the first nonlinear capacitance compensation circuit **706** as shown. The capacitance compensation control circuit **708** further provides a second compensation control signal SC**2** to the first nonlinear capacitance compensation circuit **706**. As such, the capacitance compensation control circuit **708** adjusts the second compensation capacitance CC**2** using the second compensation control signal SC**2** to at least partially linearize the second nonlinear capacitance CN**2**. In one embodiment of the capacitance compensation control circuit **708**, the capacitance compensation control circuit **708** adjusts the second compensation capacitance CC**2** using the second compensation control signal SC**2** to substantially linearize the second nonlinear capacitance CN**2**.

FIG. **61** shows the electronics apparatus **700** according to an additional embodiment of the electronics apparatus **700**. The electronics apparatus **700** illustrated in FIG. **61** is similar to the electronics apparatus **700** illustrated in FIG. **59**, except in the electronics apparatus **700** illustrated in FIG. **61**, the nonlinear capacitance compensation circuitry **704** is similar to the nonlinear capacitance compensation circuitry **704** illustrated in FIG. **60**. In this regard, the MOS transistor element **726** has a drain-to-body capacitance CDB between the drain **728** and the body **732**. The MOS transistor element **726** further has a source-to-body capacitance CSB between the source **730** and the body **732**. As such, the first nonlinear capacitance CN is the drain-to-body capacitance CDB and the second nonlinear capacitance CN**2** is the source-to-body capacitance CSB.

FIG. **62** shows the electronics apparatus **700** according to another embodiment of the electronics apparatus **700**. The electronics apparatus **700** illustrated in FIG. **62** is similar to the electronics apparatus **700** illustrated in FIG. **60**, except in the electronics apparatus **700** illustrated in FIG. **62**, the capacitance compensation control circuit **708** is replaced with a bias circuit **734**. As such, the bias circuit **734** provides a first bias signal SB**1** and a second bias signal SB**2** to the first nonlinear capacitance compensation circuit **706** to replace the first compensation control signal SC**1** and the second compensation control signal SC**2**, respectively.

In this regard, the first nonlinear capacitance compensation circuit **706** adjusts the first compensation capacitance CC and the second compensation capacitance CC**2** based on the the first bias signal SB**1** and the second bias signal SB**2**, respectively, to at least partially linearize the first nonlinear capacitance CN and the second nonlinear capacitance CN**2**, respectively. Additionally, the bias circuit **734** provides the first bias signal SB**1** and the second bias signal SB**2** to the first electronic device **702** to provide biasing of the first electronic device **702**. In an additional embodiment of the electronics apparatus **700**, the second bias signal SB**2**, the second nonlinear capacitance CN**2**, and the second compensation capacitance CC**2** are omitted.

FIG. **63** shows the electronics apparatus **700** according to a further embodiment of the electronics apparatus **700**. The electronics apparatus **700** illustrated in FIG. **63** is similar to the electronics apparatus **700** illustrated in FIG. **61**, except in the electronics apparatus **700** illustrated in FIG. **63**, the capacitance compensation control circuit **708** is replaced with the bias circuit **734**. As such, the bias circuit **734** provides a bias between the drain **728** and the body **732** of the MOS transistor element **726** via the first bias signal SB**1** (FIG. **62**) and further provides a bias between the source **730** and the body **732** via the second bias signal SB**2** (FIG. **62**).

FIG. **64** shows the first nonlinear capacitance compensation circuit **706** illustrated in FIG. **52** according to one embodiment of the first nonlinear capacitance compensation circuit **706**. The first nonlinear capacitance compensation circuit **706** includes a varactor diode **736**, a varactor bias circuit **738**, and a bias isolation capacitive element **740**. The varactor diode **736** has the first compensation capacitance CC. The varactor diode **736** is coupled to the first electronic device **702** (FIG. **52**) via the bias isolation capacitive element **740**. The varactor bias circuit **738** provides a varactor diode bias signal to the varactor diode **736** to adjust the first compensation capacitance CC. The bias isolation capacitive element **740** substantially isolates the varactor diode bias signal from the first electronic device **702** (FIG. **52**). In one embodiment of the varactor diode **736**, the varactor diode **736** is a MOS varactor. In an alternate embodiment of the varactor diode **736**, the varactor diode **736** is a junction diode varactor.

FIG. **65** shows the electronics apparatus **700** according to one embodiment of the electronics apparatus **700**. The electronics apparatus **700** illustrated in FIG. **65** is similar to the electronics apparatus **700** illustrated in FIG. **51**, except in the electronics apparatus **700** illustrated in FIG. **65** the

first electronic device **702** (FIG. **1**) is not shown and the electronics apparatus **700** further includes a group **742** of electronic devices, a first connection node **744**, and a second connection node **746**.

The group **742** of electronic devices is coupled in series between the first connection node **744** and the second connection node **746**. The group **742** of electronic devices includes the first electronic device **702** (FIG. **1**). The first nonlinear capacitance compensation circuit **706** is coupled between the first connection node **744** and the second connection node **746**. Each of the group **742** of electronic devices has a corresponding one of a group of nonlinear capacitances. The capacitance compensation control circuit **708** adjusts the first compensation capacitance CC (FIG. **1**) to at least partially linearize at least one of the group of nonlinear capacitances.

FIG. **66** shows the electronics apparatus **700** according to an alternate embodiment of the electronics apparatus **700**. The electronics apparatus **700** illustrated in FIG. **66** is similar to the electronics apparatus **700** illustrated in FIG. **65**, except in the electronics apparatus **700** illustrated in FIG. **66**, the first nonlinear capacitance compensation circuit **706** is replaced with a group **748** of nonlinear capacitance compensation circuits, which are coupled in series between the first connection node **744** and the second connection node **746**. As such, each of the group **748** of nonlinear capacitance compensation circuits is coupled to a corresponding one of the group **742** of electronic devices.

The group **742** of electronic devices includes the first electronic device **702** (FIG. **1**). Each of the group **742** of electronic devices has a corresponding one of a group of nonlinear capacitances. The group **748** of nonlinear capacitance compensation circuits includes the first nonlinear capacitance compensation circuit **706**. Each of the group **748** of nonlinear capacitance compensation circuits has a corresponding one of a group of compensation capacitances. The capacitance compensation control circuit **708** adjusts at least two of the group of compensation capacitances to at least partially linearize at least two of the group of nonlinear capacitances.

FIG. **67** shows the electronics apparatus **700** according to an additional embodiment of the electronics apparatus **700**. The electronics apparatus **700** illustrated in FIG. **67** is similar to the electronics apparatus **700** illustrated in FIG. **66**, except in the electronics apparatus **700** illustrated in FIG. **67**, the nonlinear capacitance compensation circuitry **704** further includes a fine nonlinear capacitance compensation circuit **750** coupled between the first connection node **744** and the second connection node **746**. The capacitance compensation control circuit **708** (FIG. **66**) is not shown to simplify FIG. **67**.

In this regard, the group of compensation capacitances are coarse compensation capacitances. The fine nonlinear capacitance compensation circuit **750** has a fine compensation capacitance. The capacitance compensation control circuit **708** (FIG. **66**) adjusts the fine compensation capacitance to further partially linearize at least a portion of the group of nonlinear capacitances.

FIG. **68** shows the electronics apparatus **700** according to another embodiment of the electronics apparatus **700**. The electronics apparatus **700** illustrated in FIG. **68** is similar to the electronics apparatus **700** illustrated in FIG. **67**, except in the electronics apparatus **700** illustrated in FIG. **68**, the group **742** of electronic devices includes a group **752** of sub-switches coupled between the first connection node **744** and the second connection node **746**.

FIG. **69** shows the electronics apparatus **700** according to a further embodiment of the electronics apparatus **700**. The electronics apparatus **700** illustrated in FIG. **69** is similar to the electronics apparatus **700** illustrated in FIG. **67**, except in the electronics apparatus **700** illustrated in FIG. **69**, the group **742** of electronic devices includes a group **754** of amplifier stages coupled between the first connection node **744** and the second connection node **746**.

FIG. **70** shows the electronics apparatus **700** according to one embodiment of the electronics apparatus **700**. The electronics apparatus **700** illustrated in FIG. **70** is similar to the electronics apparatus **700** illustrated in FIG. **63**, except the electronics apparatus **700** illustrated in FIG. **70** further includes a transistor bias circuit **756**, which biases the MOS transistor element **726** shown in FIG. **70** instead of the MOS transistor element **726** being biased by the bias circuit **734**.

FIGS. **71**A, **71**B, **71**C, and **71**D are graphs illustrating linearity responses of the first nonlinear capacitance CN, the first compensation capacitance CC, a first elementary response E**1** of the first nonlinear capacitance compensation circuit **706**, and a second elementary response E**2** of the first nonlinear capacitance compensation circuit **706**, respectively, shown in FIG. **51**.

The linearity response of the first compensation capacitance CC is the response required to at least partially linearize the response of the first nonlinear capacitance CN. However, the response of the first compensation capacitance CC may be too complex to be provided by a single corrective element. Therefore, in one embodiment of the first nonlinear capacitance compensation circuit **706**, two or more elementary responses may need to be combined to provide the required response for the first compensation capacitance CC. In this regard, the first elementary response E**1** and the second elementary response E**2** may be combined to provide the response of the first compensation capacitance CC. As such, the capacitance compensation control circuit **708** (FIG. **1**) adjusts the first compensation capacitance CC based on a piece-wise function.

Those skilled in the art will recognize improvements and modifications to the preferred embodiments of the present disclosure. All such improvements and modifications are considered within the scope of the concepts disclosed herein and the claims that follow.

What is claimed is:

1. An apparatus comprising:

a first electronic device having a first nonlinear capacitance and coupled to a first nonlinear capacitance compensation circuit;

a first replica circuit;

the first nonlinear capacitance compensation circuit having a first compensation capacitance and configured to receive a first compensation control signal; and

a capacitance compensation control circuit configured to adjust the first compensation capacitance based on the first replica circuit using the first compensation control signal to at least partially linearize the first nonlinear capacitance.

2. The apparatus of claim **1** wherein the first electronic device is an RF amplifier and the first nonlinear capacitance is an amplifier output capacitance of the RF amplifier.

3. The apparatus of claim **2** wherein the RF amplifier is a power amplifier.

4. The apparatus of claim **2** wherein the RF amplifier is a low noise amplifier.

5. The apparatus of claim **2** wherein the RF amplifier is a complementary metal-oxide-semiconductor (CMOS) amplifier.

6. The apparatus of claim 2 wherein the RF amplifier is a silicon-on-insulator (SOI) amplifier.

7. The apparatus of claim 1 wherein the first electronic device further has a second nonlinear capacitance, the first nonlinear capacitance compensation circuit further has a second compensation capacitance and is further configured to receive a second compensation control signal, and the capacitance compensation control circuit is further configured to adjust the second compensation capacitance using the second compensation control signal to at least partially linearize the second nonlinear capacitance.

8. The apparatus of claim 7 wherein the first electronic device is a first RF switch, which is a MOS transistor element comprising a drain, a source, and a body, such that the first nonlinear capacitance is a drain-to-body capacitance and the second nonlinear capacitance is a source-to-body capacitance.

9. The apparatus of claim 1 further comprising a first capacitive element wherein the first electronic device is a first RF switch, which is coupled to the first capacitive element.

10. The apparatus of claim 1 wherein the capacitance compensation control circuit is further configured to adjust the first compensation capacitance using the first compensation control signal to substantially linearize the first nonlinear capacitance.

11. The apparatus of claim 1 wherein the first nonlinear capacitance compensation circuit comprises a varactor diode having the first compensation capacitance.

12. The apparatus of claim 11 wherein the capacitance compensation control circuit is further configured to adjust the first compensation capacitance via a varactor diode bias signal, which is substantially isolated from the first electronic device.

13. The apparatus of claim 1 wherein the capacitance compensation control circuit is further configured to adjust the first compensation capacitance based on at least a first system factor.

14. The apparatus of claim 1 wherein the capacitance compensation control circuit is further configured to adjust the first compensation capacitance based on a piece-wise correction function.

15. An apparatus comprising a first nonlinear capacitance compensation circuit, a capacitance compensation control circuit, and a plurality of electronic devices coupled in series between a first connection node and a second connection node, wherein:

the plurality of electronic devices comprises a first electronic device, which has a first nonlinear capacitance and is coupled to the first nonlinear capacitance compensation circuit;

the first nonlinear capacitance compensation circuit has a first compensation capacitance and is configured to receive a first compensation control signal;

the capacitance compensation control circuit is configured to adjust the first compensation capacitance using the first compensation control signal to at least partially linearize the first nonlinear capacitance;

each of the plurality of electronic devices has a corresponding one of a plurality of nonlinear capacitances;

the first nonlinear capacitance compensation circuit is coupled between the first connection node and the second connection node; and

the capacitance compensation control circuit is further configured to adjust the first compensation capacitance to at least partially linearize at least one of the plurality of nonlinear capacitances.

16. The apparatus of claim 15 wherein:

the apparatus further comprises a plurality of nonlinear capacitance compensation circuits coupled in series, such that each of the plurality of electronic devices is coupled to a corresponding one of the plurality of nonlinear capacitance compensation circuits;

the plurality of nonlinear capacitance compensation circuits comprises the first nonlinear capacitance compensation circuit;

each of the plurality of nonlinear capacitance compensation circuits has a corresponding one of a plurality of compensation capacitances; and

the capacitance compensation control circuit is further configured to adjust at least two of the plurality of compensation capacitances to at least partially linearize at least two of the plurality of nonlinear capacitances.

17. The apparatus of claim 16 further comprising a fine nonlinear capacitance compensation circuit coupled between the first connection node and the second connection node, wherein:

the plurality of compensation capacitances are coarse compensation capacitances;

the fine nonlinear capacitance compensation circuit has a fine compensation capacitance; and

the capacitance compensation control circuit is further configured to adjust the fine compensation capacitance to further partially linearize at least a portion of the plurality of nonlinear capacitances.

18. The apparatus of claim 16 wherein the plurality of electronic devices comprises a plurality of amplifier stages coupled in series between the first connection node and the second connection node.

19. The apparatus of claim 16 wherein the plurality of electronic devices comprises a plurality of sub-switches coupled in series between the first connection node and the second connection node.

20. An apparatus comprising:

a first electronic device having a first nonlinear capacitance and coupled to a first nonlinear capacitance compensation circuit;

a first replica circuit;

the first nonlinear capacitance compensation circuit having a first compensation capacitance; and

a bias circuit configured to provide a first bias signal to the first electronic device and further provide the first bias signal to the first nonlinear capacitance compensation circuit, which is configured to adjust the first compensation capacitance based on the first bias signal and the first replica circuit to at least partially linearize the first nonlinear capacitance.

21. The apparatus of claim 20 wherein:

the first electronic device further has a second nonlinear capacitance and is further coupled to the first nonlinear capacitance compensation circuit;

the first nonlinear capacitance compensation circuit further has a second compensation capacitance; and

the bias circuit is further configured to provide a second bias signal to the first electronic device and further provide the second bias signal to the first nonlinear capacitance compensation circuit, which is configured to adjust the second compensation capacitance based on the second bias signal to at least partially linearize the second nonlinear capacitance.

* * * * *